Digital amplifier module SD7

- **for 1 or 2 proportional solenoids**
- **Interface: - analogue**
  - CANopen / J1939
  - Profibus DP
  - HART
- **max. 4 analogue differential inputs**
- **max. 8 digital inputs**
- **Fixed command values**
- **Adjustable via PC**
  (optionally with manual operation on front panel)
- **for snapping on to dome rail**
- **also available as controller module** **(see data sheet 1.13-106)**

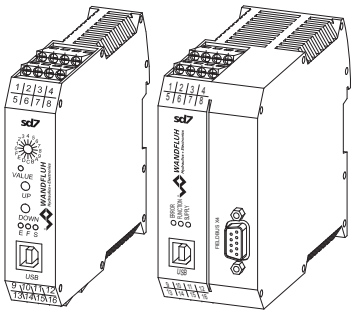

DESCRIPTION

Digital amplifier module for installation on dome rail for driving proportional or black/white valves with one or two solenoids. The parameterisation takes place by means of menu-controlled parameterisation- and diagnostics software «PASO» from Wandfluh (USB-interface) or optionally with a manual control on the front panel. Separate ramps for up and down as well as fixed adjustable command values are integrated in the amplifier module as standard. The electronics are optionally available with different field bus interfaces.

FUNCTION

The amplifier module has one, resp., two **P**ulse-**W**idth-**M**odulated current outputs with superimposed dither signal. The solenoid outputs can also be parameterised for black/white solenoids. The analogue and digital inputs as well as the digital outputs can be programmed individually. With this device control tasks can be solved in a very simple manner. The field bus connection enables reading the command value signal as well as the parameterisation directly via the field bus.

APPLICATION

As snap-on module, the amplifier module is mainly utilised in the industrial field. The module can be mounted on dome-rails. The connection with terminal screws enables commissioning without special tools in a short time. The amplifier module is particularly suitable for applications with additional functions such as ramps, fixed command values, etc. Customer-specific requirements can be implemented in a simple manner.

CONTENT

GENERAL SPECIFICATIONS

Execution	Module for electrical control cubicle housing made of plastic
Dimensions	
• Basic amplifier analogue	105 x 114 x 22,5 mm
• Basic amplifier CANopen/J1939	105 x 114 x 45 mm
• Basic amplifier Profibus DP	105 x 114 x 45 mm
• Basic amplifier HART	105 x 114 x 45 mm
• Enhanced amplifier analogue	105 x 114 x 45 mm
• Enhanced amplifier CANopen/J1939	105 x 114 x 45 mm
• Enhanced amplifier Profibus DP	105 x 114 x 45 mm
• Enhanced amplifier HART	105 x 114 x 45 mm
	105 x 114 x 45 mm
Installation	for 35 mm dome rail acc. to EN 60715
Weight	
• Basic amplifier analogue	130 g
• Basic amplifier CANopen/J1939	220 g
• Basic amplifier Profibus DP	220 g
• Basic amplifier HART	220 g
• Enhanced amplifier analogue	220 g
• Enhanced amplifier CANopen/J1939	240 g
• Enhanced amplifier Profibus DP	240 g
• Enhanced amplifier HART	240 g
Connections	Screw terminals, max. cable cross-section 2,5 mm²
Working temperature	-20…+70 °C The accummulated current of the simultaneously powered solenoid depends on the ambient temperature. Further information can be found in the operating instructions.

TYPE CODE

S D7 □ □ □ □ □ - □ □ # □

Module for electrical control cubicle

Digital

Adjustable with:
- PASO and manual operation 2
- PASO without manual operation 3

Software configuration (function of card):
- Basic amplifier 0
- Enhanced amplifier 5

1-solenoid version 1
2-solenoid version 2

Supply voltage: 24 VDC D2
12 VDC D3

Basic amplifier:
- Analogue input 1: voltage 2: current 0
- Analogue input 1 and 2: both voltage 1
- Analogue input 1 and 2: both current 2
  Analogue input 3: always current (only with HART)

Enhanced amplifier:
- Analogue input 1 and 3: both voltage 4
  Analogue input 2 and 4: both current
- Analogue input 1 to 4: all voltage 5
- Analogue input 1 to 4: all current 6
- Analogue input 1 and 2: both voltage 7
  Analogue input 3 and 4: both current
- Analogue input 1 and 2: both current 8
  Analogue input 3 and 4: both voltage

Basic amplifier without HART
- Analogue input 1 and 2: 10-Bit resolution A

Basic amplifier with HART
- Analogue input 1 and 2: 10-Bit resolution B
- Analogue input 3: 16-Bit resolution

Enhanced amplifier
- Analogue input 1 and 2: 10-Bit resolution B
- Analogue input 3 and 4: 16-Bit resolution

Option field bus:
- without field bus A
- with CANopen C
- with Profibus DP P
- with J1939 J
- with HART H

Design-Index (Subject to change)

Basic amplifier with analogue interface

ELECTRICAL SPECIFICATIONS

Protection class	IP 30 acc. to EN 60 529
Supply voltage	24 VDC or 12 VDC
Voltage range:	
• 24 VDC	21…30 V
• 12 VDC	10,5…15 V
Residual ripple	<10 %
Fuse	low
Current consumption:	
• No-load current	approx. 40 mA
• Maximum current consumption	non-load current + 1,8 A per solenoid (with 24 VDC) non-load current + 2,3 A per solenoid (with 12 VDC)
Command value signal:	Selectable with software Differential input not galvanically separated, for ground potential differences up to 1,5 V 4…+20 mA / 0…+20 mA 0…+10 V (1- or 2-solenoid version) -10…+10 V (only 2-solenoid version)
Resolution	10-Bit
Input resistance	Voltage input >18 kΩ Load for current input = 250 Ω
Stabilised output voltage	10 VDC (with 24 VDC) 8 VDC (with 12 VDC) max. load 30 mA
Solenoid current:	
• Minimal current I_{min}	Adjustable 0…950 mA Factory setting 150 mA
• Maximal current I_{max}	Adjustable I_{min}…1,8 A (with 24 VDC) I_{min}…2,3 A (with 12 VDC) Factory setting 700 mA
• Accumulated current limitation	The accummulated current of the simultaneously powered solenoids depends on the ambient temperature. Further information can be found in the operating instructions.
Dither	Frequency adjustable 20…500 Hz Factory setting 100 Hz Level adjustable 0…400 mA Factory setting 100 mA
Temperature drift	<1 % at ΔT = 40 °C
Digital inputs	Switching threshold high 6…30 VDC Switching threshold low 0…1 VDC
Digital outputs	Low-Side-Switch: U_{max} = 40 VDC I_{max} = -700 mA
Ramps adjustable	0…500 s
Serial interface	USB (receptacle type B) for parameterising with «PASO»
EMV	
Immunity	EN 61 000-6-2
Emission	EN 61 000-6-4

BLOCK DIAGRAM

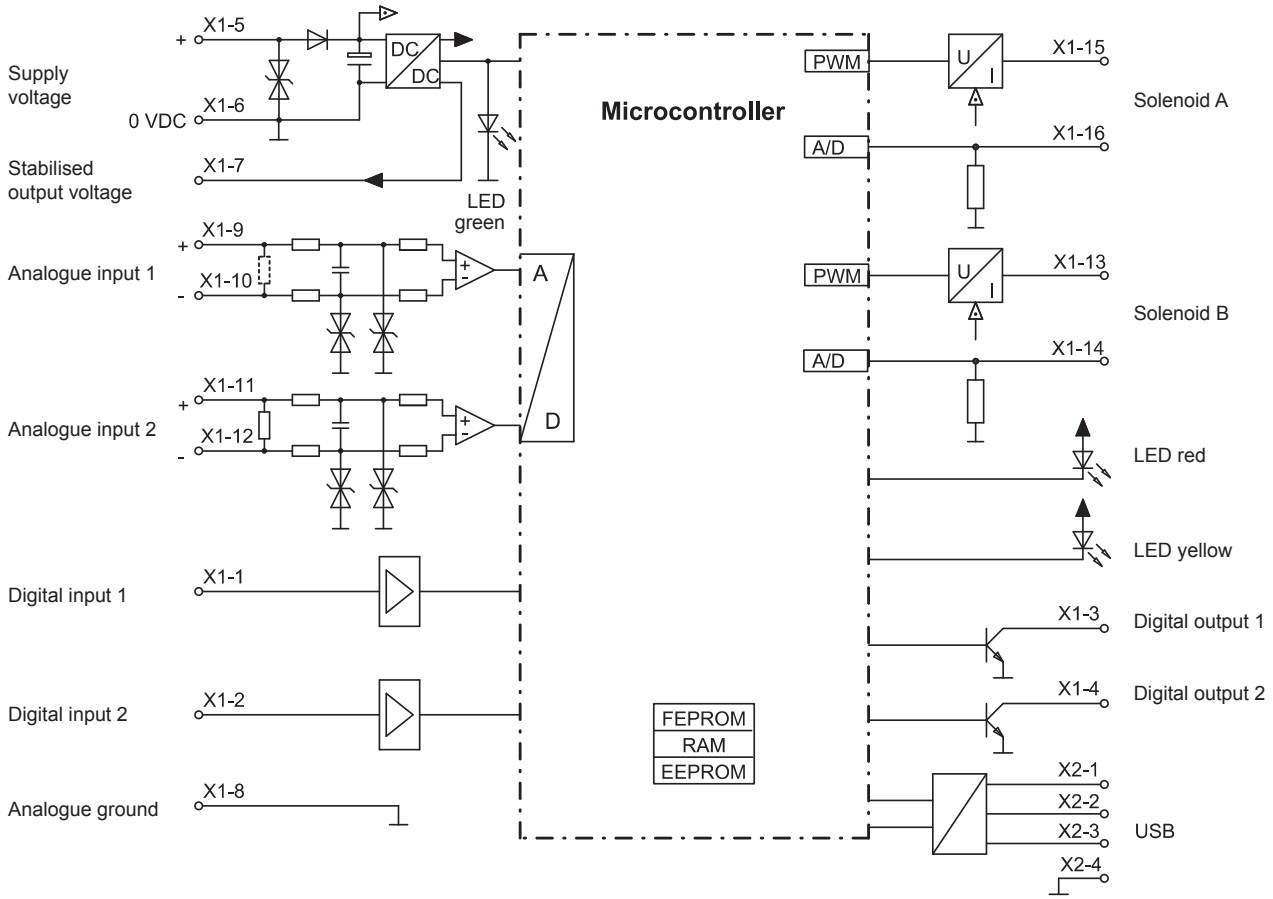

DIMENSIONS

Type: SD73 **Type: SD72**

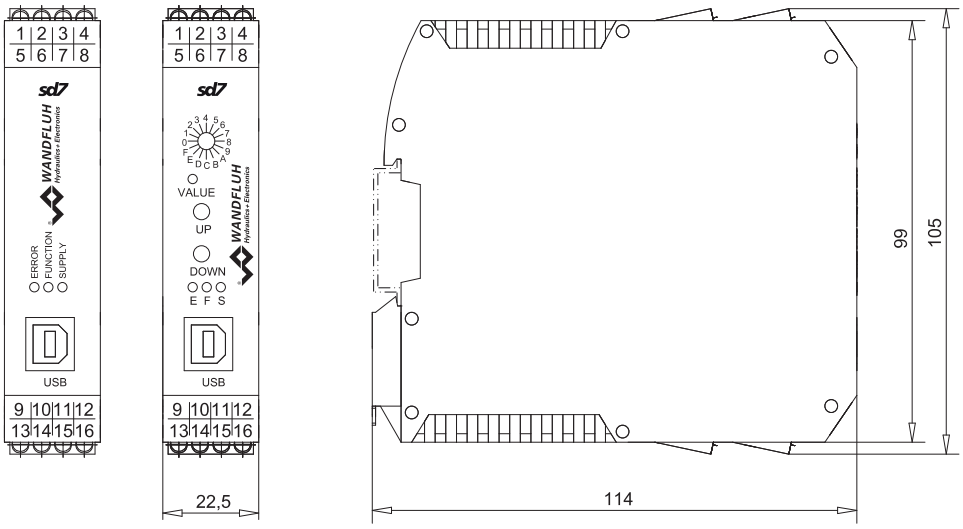

CONNECTOR WIRING DIAGRAM / PIN ASSIGNMENT

USB-interface, USB Type B X2

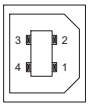

1 = VBUS
2 = D-
3 = D+
4 = GND

REMARK!
The parameterisation cable is not part of the scope of supply (commercially available USB-cable, plug type A to plug type B)

PIN-assignment X1

1 = Digital input 1
2 = Digital input 2
3 = Digital output 1
4 = Digital output 2
5 = Supply voltage +
6 = Supply voltage 0 VDC
7 = Stabilised output voltage
8 = Analogue ground
9 = Analogue input 1+
10 = Analogue input 1-
11 = Analogue input 2+
12 = Analogue input 2-
13 = Output solenoid driver 2+
14 = Output solenoid driver 2-
15 = Output solenoid driver 1+
16 = Output solenoid driver 1-

Configuration analogue input

Type description	Analogue input 1	Analogue input 2
SD7x0xDx**0**-AA	Voltage	Current
SD7x0xDx**1**-AA	Voltage	Voltage
SD7x0xDx**2**-AA	Current	Current

START-UP

Information regarding installation and commissioning are contained in the information leaflet supplied with the amplifier module and in the operating instructions.

Additional information can be found on our website:
www.wandfluh.com

Free-of-charge download:
• «PASO-SD7» Parameterisation software
• Operating instructions (*pdf)

ADDITIONAL INFORMATION

	Wandfluh documentation	
Wandfluh electronics general	register	1.13
Proportional spool valves	register	1.10
Proportional pressure valves	register	2.3
Proportional flow control valves	register	2.6

DESIGN

The amplifier module can be parameterised by means of the parameterisation software «PASO-SD7» through the USB-interface. In addition, the parameterisation software makes a data analysis possible. The software «PASO-SD7» is supported by Windows 2000 and Windows XP, Vista and Windows 7 with 32/64-Bit. Optionally the amplifier module is equipped with a manual control, which enables the setting of the most important parameters by means of rotary selector switch and push-buttons and therefore makes a commissioning of the amplifier module possible without a PC.

FUNCTION DESCRIPTION

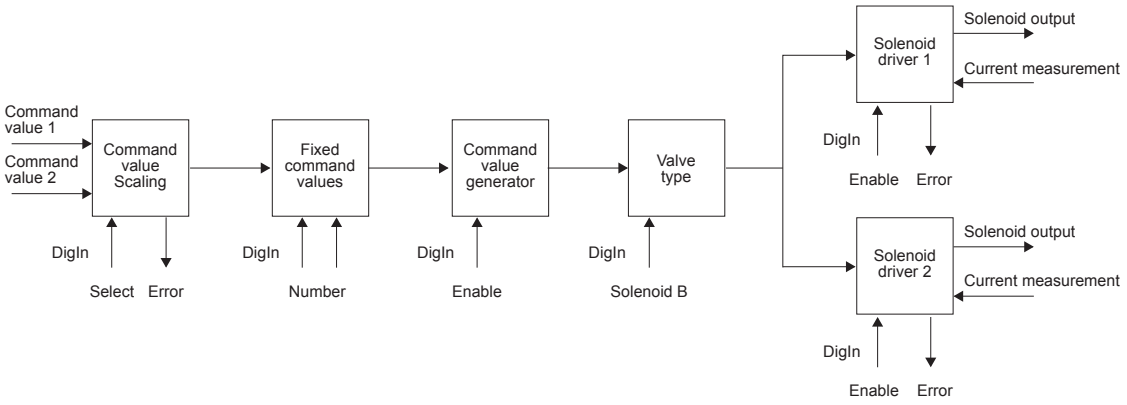

SD7 BASIC AMPLIFIER WITH ANALOGUE INTERFACE

Command value scaling

The command value can be applied as a voltage, current or digital signal. For every command value, the input utilised can be selected. The scaling takes place via the parameters „Interface“ and „Reference“. Furthermore every command value can be monitored for a cable break (except for voltage and digital signal). For every command value a dead band can also be set. Optionally one can operate with two command values. The characteristic of these command values can be adjusted.

Fixed command values

There are 3 fixed command values available, which can be selected via 2 digital inputs.

Command value generator

For each solenoid output two linear ramps for up and down are available which can be adjusted separately.

Valve type

Here the operating mode is set. In addition it can be selected whether proportional or switching solenoids are driven.

Mode of operation „Command value unipolar (1-Sol)“

Dependent on a unipolar command value (voltage, current), the solenoid is driven (e.g. 0...10V correspond to 0...100 % command value, 0...100 % command value correspond to Imin...Imax solenoid driver 1).

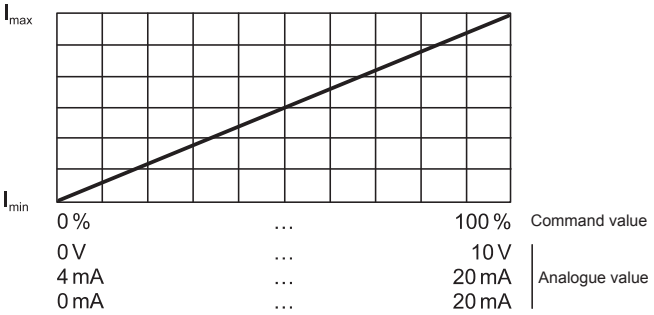

Mode of operation „Command value unipolar (2-Sol)“

Dependent on a unipolar command value signal (voltage, current), one of the two solenoids is driven, acc. to the signal level. The changeover threshold between the two solenoids as standard is in the middle of the values range of the command value signal (e.g. 0….10V correspond to -100….+100 % command value, -100....0 % command value correspond to Imin….Imax solenoid driver 2, 0….+100 % command value correspond to Imin….Imax solenoid driver 1).

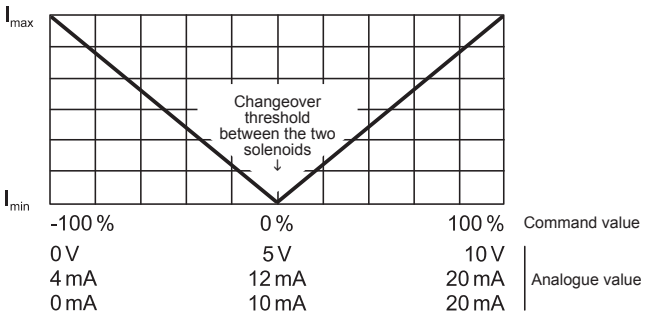

Mode of operation „Command value bipolar (2-Sol)“
Dependent on a bipolar command value signal (voltage), one of the two solenoids is driven, acc. to the signal level. The changeover threshold between the two solenoids as standard is at 0V (e.g. -10….+10V correspond to -100….+100 % command value, -100…0 % command value correspond to Imin….Imax solenoid driver 2, 0….+100 % command value correspond to Imin….Imax solenoid driver 1).

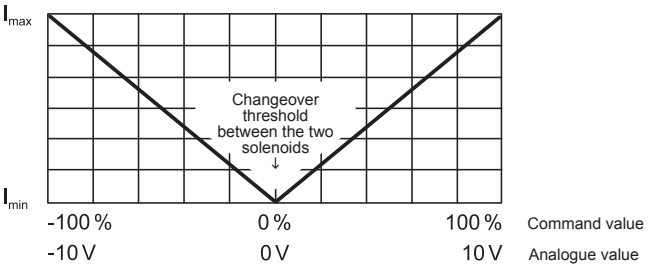

Mode of operation „Command value unipolar (2-Sol with DigIn)“
Dependent on a unipolar command value signal (voltage, current), the solenoid is driven by solenoid driver 1, when the selected digital input is „not activated“, resp. the solenoid by the solenoid driver 2, when the selected digital input is „activated“ (e.g. 0….10V correspond to 0….100 % command value, 0....100 % command value correspond to Imin….Imax solenoid driver 1 or 2).

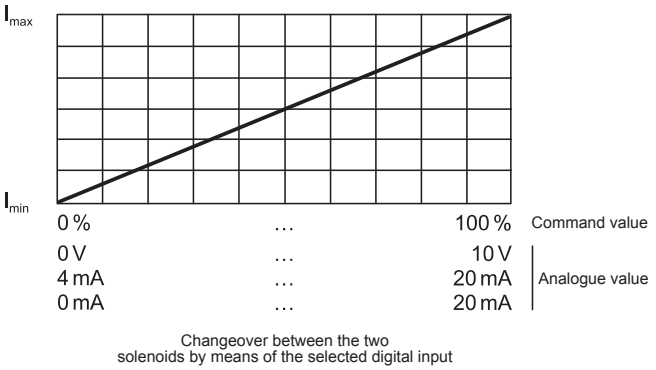

Signal recording
The SD7 amplifier module has a signal recording function, This, by means of PASO, enables the recording of various system signals, such as command value, solenoid currents, etc., which can be represented on a common time axis.

Solenoid driver
Two Pulse-Width-Modulated current outputs are available. To each output, a dither signal is superimposed, whereas dither frequency and dither level can be adjusted separately. For each output, the minimum (Imin) and maximum (Imax) current can be adjusted separately. The solenoid outputs can also be configurated as switching outputs. Therewith for each output a power reduction can be adjusted separately.

Optimisation of characteristic curve
A characteristic curve adjustable per solenoid „Command value input – solenoid current output“ enables an optimised (e.g., linearised) characteristic of the hydraulic system.

CONNECTION EXAMPLE

Mode of operation „command value unipolar (2-Sol)“ or „command value unipolar (2-Sol with DigIn)“

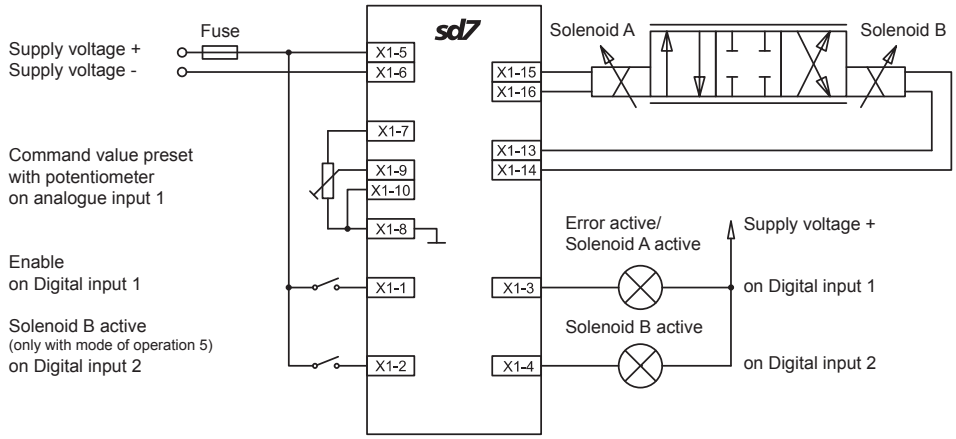

Mode of operation „command value unipolar (1-Sol)“

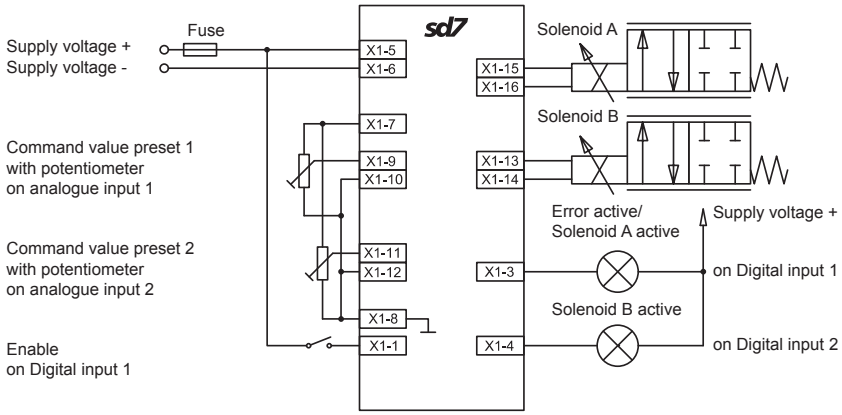

Basic amplifier with CANopen/J1939 interface

ELECTRICAL SPECIFICATIONS

Protection class	IP 30 acc. to EN 60 529
Device receptacle	
CANopen (male)	DSUB, 9-pole
Mating connector	Plug (female) DSUB, 9-pole
Supply voltage	24 VDC or 12 VDC
Voltage range:	
• 24 VDC	21,0…30,0 VDC
• 12 VDC	10,5…15,0 VDC
Residual ripple	<10 %
Fuse	low
Current consumption:	
• Non-load current	approx. 40 mA
• Maximum current consumption	non-load current + 1,8 A per solenoid (with 24 VDC) non-load current + 2,3 A per solenoid (with 12 VDC)
Analogue inputs:	Selectable with software Differential input not galvanically separated, for ground potential differences up to 1,5 V 4…+20 mA / 0…+20 mA 0…+10 V (1- or 2-solenoid version) -10…+10 V (only 2-solenoid version)
Resolution	10-Bit
Input resistance	Voltage input >18 kΩ Load for current input = 250 Ω
Stabilised output voltage	10 VDC (with 24 VDC) 8 VDC (with 12 VDC) max. load 30 mA
Bus topology	Line, differential signal transmission
Potential separation	CANopen/J1939 to «SD7»-electronics 500 VDC
Solenoid current:	
• Minimal current I_{min}	Adjustable 0…950 mA Factory setting 150 mA
• Maximal current I_{max}	Adjustable I_{min}…1,8 A (with 24 VDC) I_{min}…2,3 A (with 12 VDC) Factory setting 700 mA
• Accumulated current limitation	The accummulated current of the simultaneously powered solenoids depends on the ambient temperature. Further information can be found in the operating instructions.
Dither	Frequency adjustable 2…500 Hz Factory setting 100 Hz Level adjustable 0…400 mA Factory setting 100 mA
Temperature drift	<1 % at ΔT = 40 °C
Digital inputs	Switching threshold high 6…30 VDC Switching threshold low 0…1 VDC
Digital outputs	Low-Side-Switch: U_{max} = 40 VDC I_{max} = -700 mA
Ramps adjustable	Adjustable 0…500 s
Serial interface	USB (receptacle type B)
EMV	
Immunity	EN 61 000-6-2
Emission	EN 61 000-6-4

BLOCK DIAGRAM

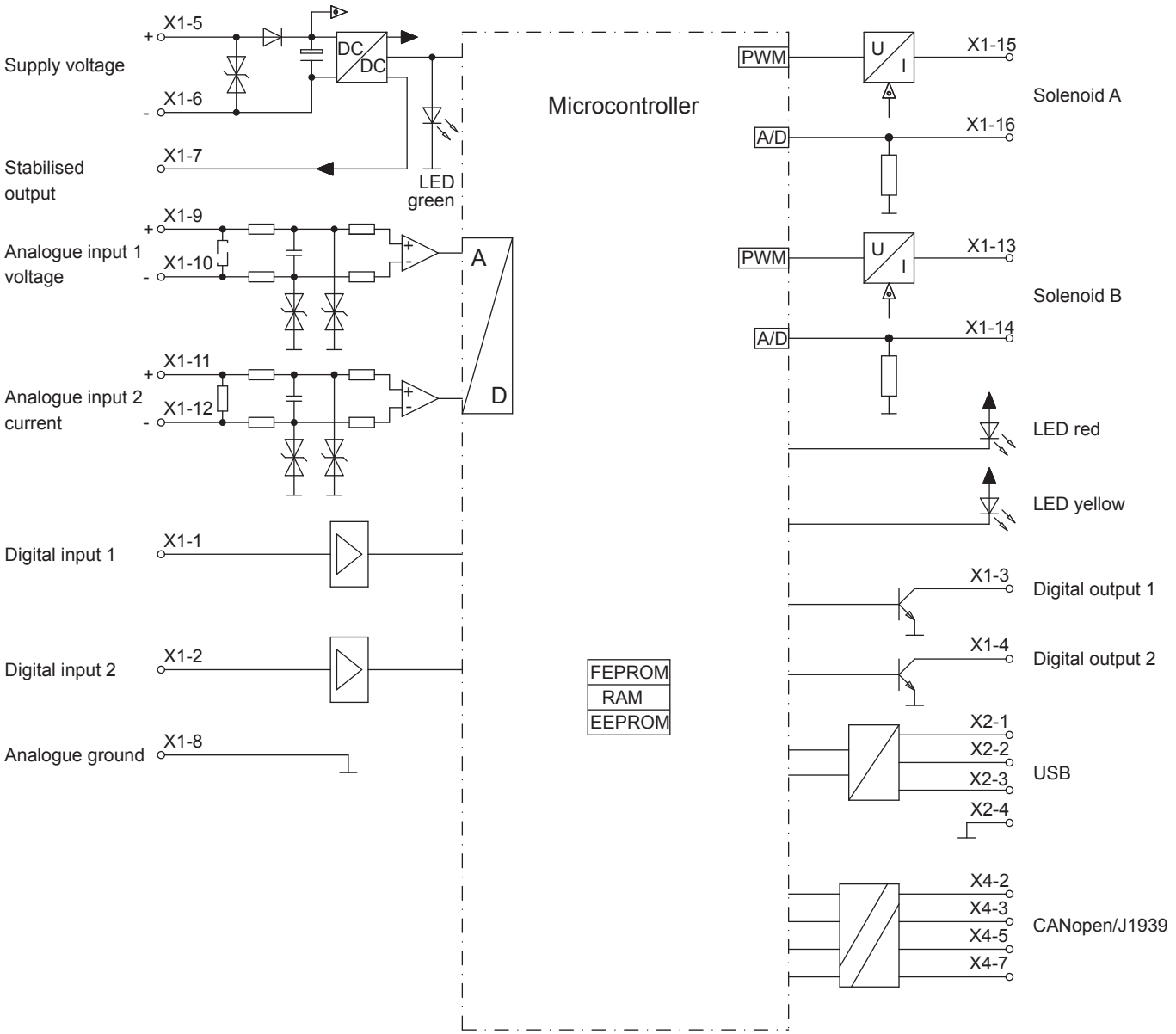

DIMENSIONS

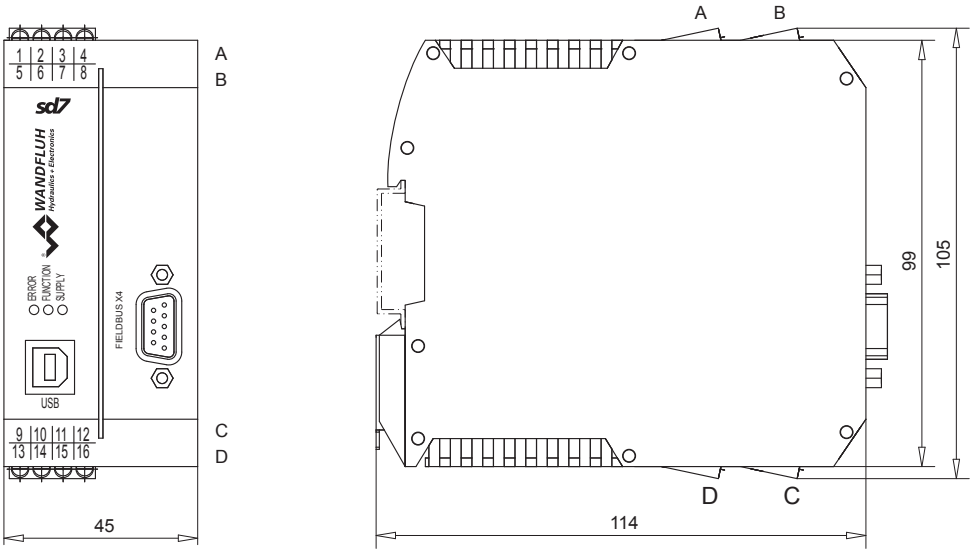

CONNECTOR WIRING DIAGRAM / PIN ASSIGNMENT

USB-interface, USB-Typ B X2

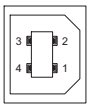

1 = VBUS
2 = D -
3 = D +
4 = GND

REMARK!
The parameterisation cable is not part of the scope of supply (commercially available USB-cable, plug type A to plug type B)

Device receptacle CANopen (male) X4

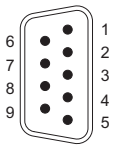

CANOPEN/J1939

1 = Reserved
2 = CANLow
3 = CANGnd
4 = Reserved
5 = CANShield
6 = Reserved
7 = CANHigh
8 = Reserved
9 = Reserved

The mating connector (plug female, DSUB, 9-pole) is not included in the delivery.

PIN Assignment X1

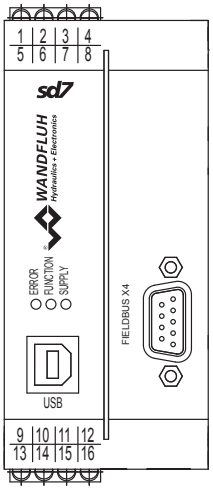

1 = Digital input 1
2 = Digital input 2
3 = Digital output 1
4 = Digital output 2
5 = Supply Analogue input +
6 = Supply voltage 0 VDC
7 = Stabilised output voltage
8 = Analogue ground
9 = Analogue input 1 +
10 = Analogue input 1 -
11 = Analogue input 2 +
12 = Analogue input 2 -
13 = Output solenoid 2 +
14 = Output solenoid 2 -
15 = Output solenoid 1 +
16 = Output solenoid 1 -

Configuration Analogue input

Type description	Analogue input 1	Analogue input 2
SD730xDx**0**-AC	Voltage	Current
SD730xDx**1**-AC	Voltage	Voltage (only 0...10 V possible)
SD730xDx**2**-AC	Current	Current

START-UP

Information regarding installation and commissioning are contained in the information leaflet supplied with the amplifier module and in the operating instructions.

Additional information can be found on our website:
www.wandfluh.com

Free-of-charge download:
• «PASO-SD7» Parameterisation software
• Operating instructions (*.pdf)
• EDS-file «WAGOB8E.eds»

ADDITIONAL INFORMATION

	Wandfluh documentation	
Wandfluh electronics general	register	1.13
Proportional directional valves	register	1.10
Proportional pressure valves	register	2.3
Proportional flow control valves	register	2.6

DESIGN

The amplifier module can be parameterised by means of the parameterisation software «PASO-SD7» through the USB-interface. In addition, the parameterisation software makes a data analysis possible. The software «PASO-SD7» is supported by Windows 2000 and Windows XP, Vista and Windows 7 with 32/64-Bit. The device control (enable, etc.) as well as the command value setting can be preset via the CANopen/J1939 or locally via digital, resp. analogue inputs. Furthermore the parameterisation as well as an analysis/diagnostic are possible via the CANopen (with J1939 on request).

FUNCTION DESCRIPTION

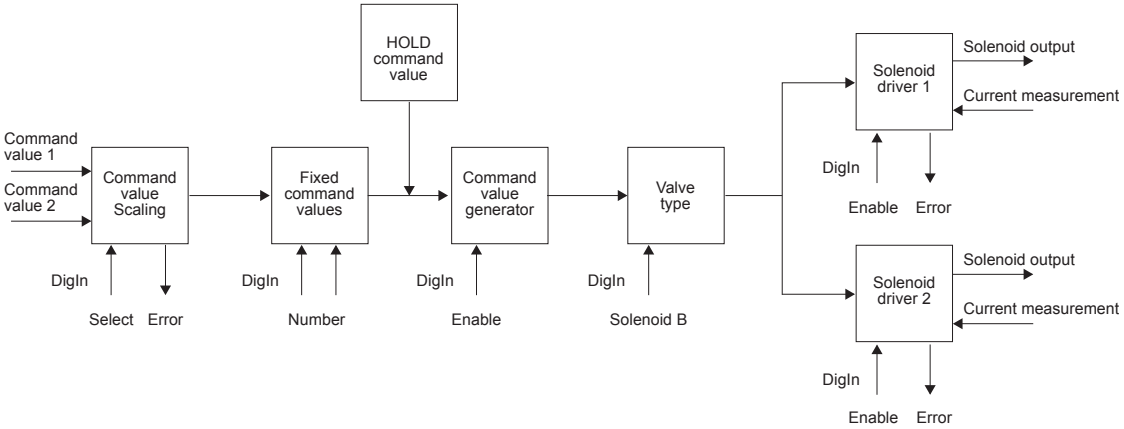

SD7 BASIC AMPLIFIER WITH CANOPEN/J1939 INTERFACE

Command value scaling
The command value can be applied via the CANopen/J1939 or as a voltage, current or digital signal. For every command value, the input utilised can be selected. The scaling takes place via the parameters „Interface“ and „Reference“. Furthermore every command value can be monitored for a cable break (except for CANopen/J1939, voltage or digital signal). For every command value a dead band can also be set. Optionally one can operate with two command values. The characteristic of these command values can be adjusted.

Fixed command values
There are 3 fixed command values available, which can be selected via 2 digital inputs.

Command value generator
For each solenoid output two linear ramps for up and down are available which can be adjusted separately.

HOLD command value
If via CANopen/J1939 the device is put into the “HOLD” condition, the respective command value is activated.

Valve type
Here the operating mode is set. In addition it can be selected whether proportional or switching solenoids are driven.

Mode of operation „Command value unipolar (1-Sol)“
Dependent on a unipolar command value signal (voltage, current), the solenoid is driven (e.g. 0….10V correspond to 0….100 % command value, 0....100 % command value correspond to Imin….Imax solenoid driver 1).

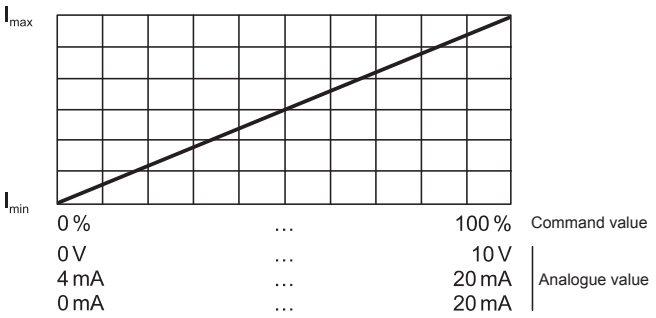

Mode of operation „Command value unipolar (2-Sol)“
Dependent on a unipolar command value signal (voltage, current), one of the two solenoids is driven, acc. to the signal level. The changeover threshold between the two solenoids as standard is in the middle of the values range of the command value signal. (e.g. 0….10V correspond to -100….+100 % command value, -100....0 % command value correspond to Imin….Imax solenoid driver 2, 0….+100 % command value correspond to Imin….Imax solenoid driver 1).

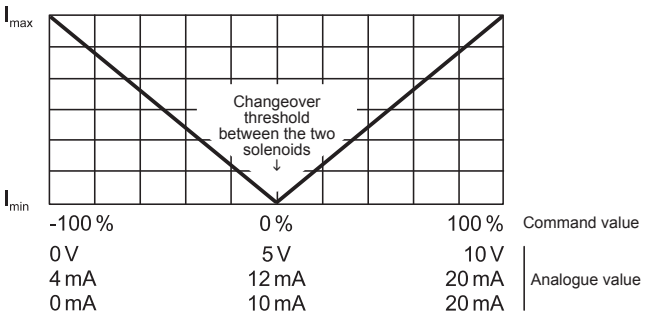

Mode of operation „Command value bipolar (2-Sol)“
Dependent on a bipolar command value signal (voltage), one of the two solenoids is driven, acc. to the signal level. The changeover threshold between the two solenoids as standard is at 0V (e.g. -10….+10V correspond to -100….+100 % command value, -100....0 % command value correspond to Imin….Imax solenoid driver 2, 0….+100 % command value correspond to Imin….Imax solenoid driver 1).

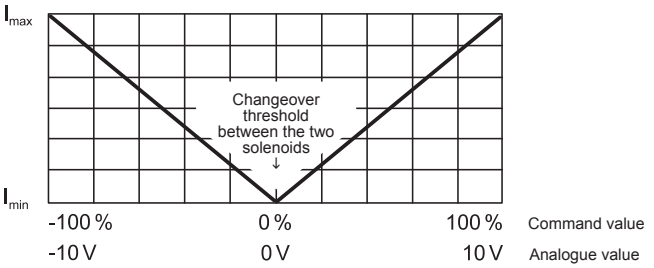

Mode of operation „Command value unipolar (2-Sol with DigIn)“
Dependent on a unipolar command value signal (voltage, current), the solenoid is driven by solenoid driver 1, when the selected digital input is „not activated“, resp. the solenoid by the solenoid driver 2, when the selected digital input is „activated“ (e.g. 0….10V correspond to 0….100 % command value, 0....100 % command value correspond to Imin….Imax solenoid driver 1 or 2).

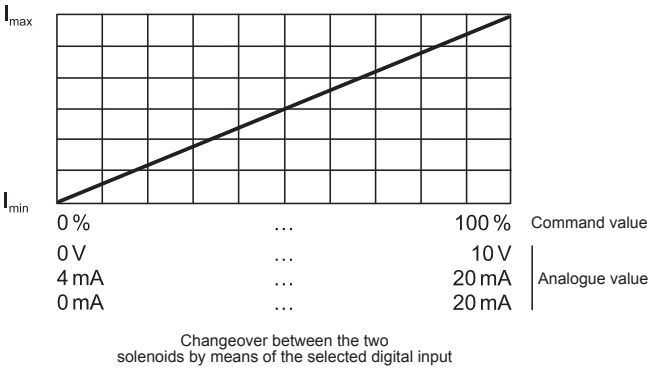

Signal recording
The SD7 amplifier module has a signal recording function, This, by means of PASO, enables the recording of various system signals, such as command value, solenoid currents, etc., which can be represented on a common time axis.

Solenoid driver
Two Pulse-Width-Modulated current outputs are available. To each output, a dither signal is superimposed, whereas dither frequency and dither level can be adjusted separately. For each output, the minimum (Imin) and maximum (Imax) current can be adjusted separately. The solenoid outputs can also be configurated as switching outputs. Therewith for each output a power reduction can be adjusted separately.

Optimisation of characteristic curve
A characteristic curve adjustable per solenoid „Command value input – solenoid current output“ enables an optimised (e.g., linearised) characteristic of the hydraulic system.

CONNECTION EXAMPLE

Mode of operation „command value unipolar (2-Sol)“ or „command value unipolar (2-Sol with DigIn)“

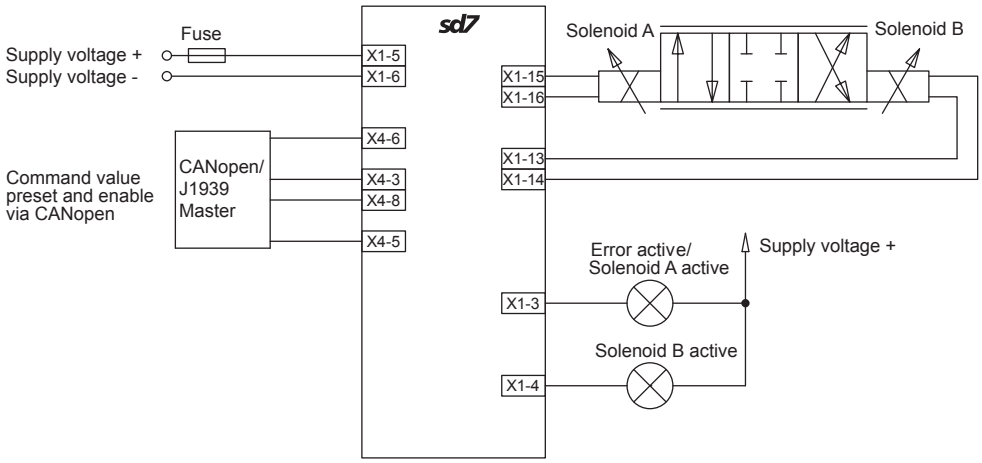

Mode of operation „command value unipolar (1-Sol)“

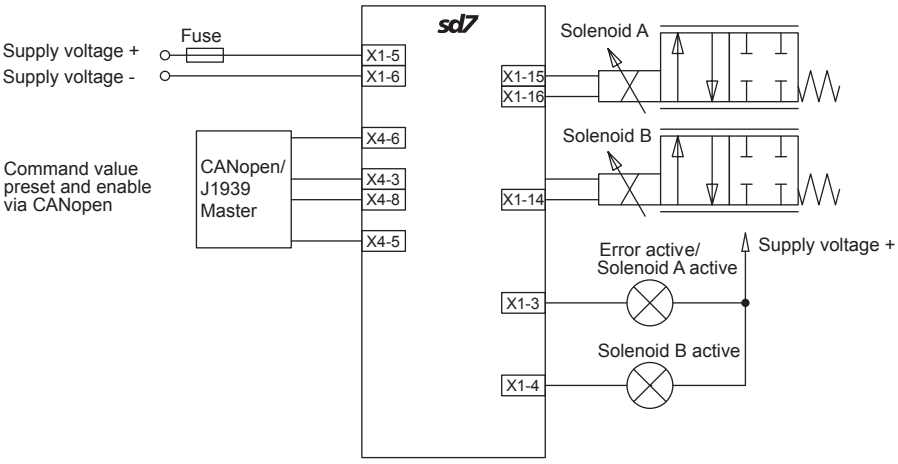

Basic amplifier with Profibus DP interface

ELECTRICAL SPECIFICATIONS

Protection class	IP 30 acc. to EN 60 529
Device receptacle	
Profibus (female)	DSUB, 9-pole
Mating connector	Plug (male) DSUB, 9-pole
Supply voltage	24 VDC or 12 VDC
Voltage range:	
• 24 VDC	21…30 V
• 12 VDC	10,5…15 V
Residual ripple	<10 %
Fuse	low
Current consumption:	
• No-load current	approx. 40 mA
• Maximum current-consumption	non-load current + 1,8 A per solenoid (with 24 VDC) non-load current + 2,3 A per solenoid (with 12 VDC)
Command value signal:	Selectable with software Diff. inputs not galvanically separated, for ground potential differences up to 1,5 V 4…+20 mA / 0…+20 mA 0…+10 V (1- or 2-solenoid version) -10…+10 V (only 2-solenoid version)
Resolution	10-Bit
Eingangswiderstand	Voltage input >18 kΩ Load for current input = 250 Ω
Stabilisierte Ausgangs-spannung	10 VDC (with 24 VDC) 8 VDC (with 12 VDC) max. load 30 mA
Bus topology	Line, differential signal transmission
Potential separation	Profibus to «SD7» electronics 500 VDC

Solenoid current:	
• Minimal current I_{min}	Adjustable 0…950 mA Factory setting 150 mA
• Maximal current I_{max}	Adjustable I_{min}…1,8 A (with 24 VDC) I_{min}…2,3 A (with 12 VDC) Factory setting 700 mA
• Accumulated current-limitation	The accummulated current of the simultaneously powered solenoids depends on the ambient temperature. Further information can be found in the operating instructions.
Dither	Frequency adjustable 20…500 Hz Factory setting 100 Hz Level adjustable 0…400 mA Factory setting 100 mA
Temperature drift	<1 % at ΔT = 40 °C
Digital inputs	Switching threshold high 6…30 VDC Switching threshold low 0…1 VDC
Digital outputs	Low-Side-Switch: U_{max} = 40 VDC I_{max} = -700 mA
Ramps adjustable	0…500 s
Serial interface	USB (receptacle type B)
EMV	
Immunity	EN 61 000-6-2
Emission	EN 61 000-6-4

BLOCK DIAGRAM

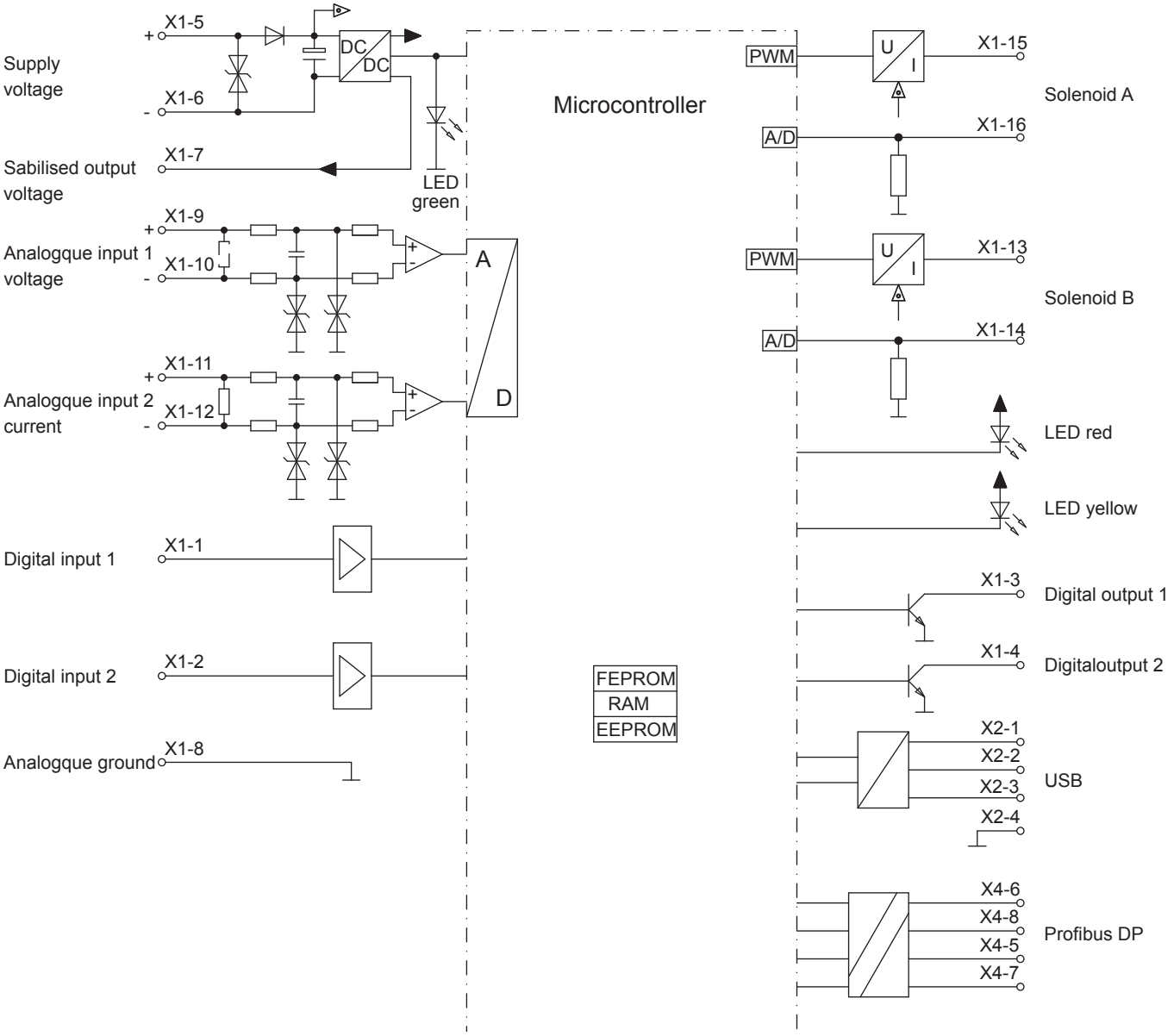

DIMENSIONS

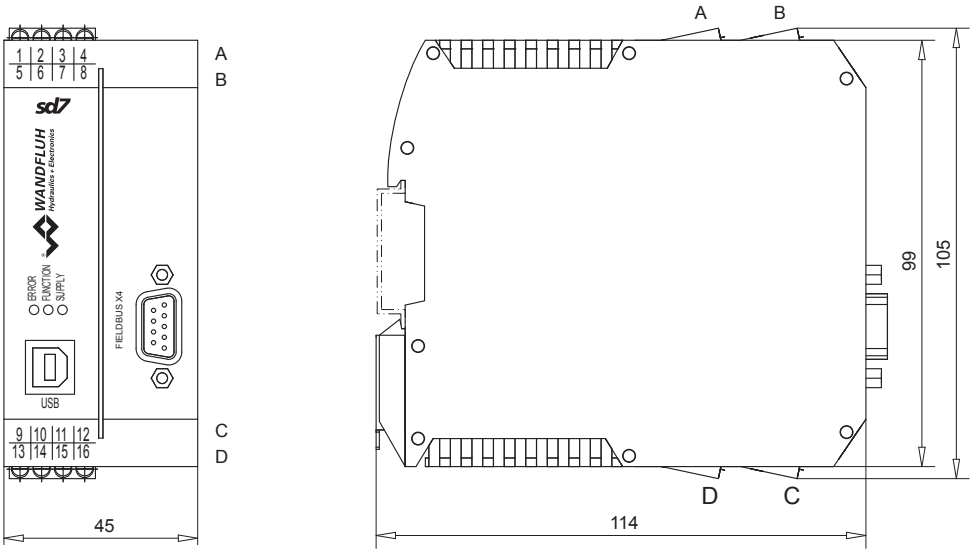

CONNECTOR WIRING DIAGRAM / PIN ASSIGNMENT

USB-interface, USB-Typ B X2

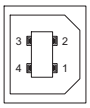

1 = VBUS
2 = D -
3 = D +
4 = GND

REMARK!
The parameterisation cable is not part of the scope of supply (commercially available USB-cable, plug type A to plug type B)

Device receptacle Profibus (female) X4

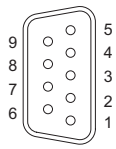

PROFIBUS

1 = Reserved
2 = Reserved
3 = RxD/TxD-P
4 = Reserved
5 = DGND
6 = VP
7 = Reserved
8 = RxD/TxD-N
9 = Reserved

The mating connector (plug male, DSUB, 9-pole) is not included in the delivery.

PIN-assignment X1

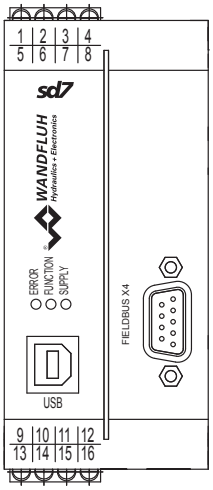

1 = Digital input 1
2 = Digital input 2
3 = Digital output 1
4 = Digital output 2
5 = Supply Analogue input +
6 = Supply voltage 0 VDC
7 = Stabilised output voltage
8 = Analogue ground
9 = Analogue input 1 +
10 = Analogue input 1 -
11 = Analogue input 2 +
12 = Analogue input 2 -
13 = Output solenoid 2 +
14 = Output solenoid 2 -
15 = Output solenoid 1 +
16 = Output solenoid 1 -

Configuration Analogue input

Type description	Analogue input 1	Analogue input 2
SD730xDx**0**-AP	Voltage	Current
SD730xDx**1**-AP	Voltage	Voltage (only 0...10 V possible)
SD730xDx**2**-AP	Current	Current

START-UP

Information regarding installation and commissioning are contained in the information leaflet supplied with the amplifier module and in the operating instructions.

Additional information can be found on our website:
www.wandfluh.com

Free-of-charge download:
- «PASO-SD7» Parameterisation software
- Operating instructions (*.pdf)
- GSD-file «WAGOB8E.gsd»

ADDITIONAL INFORMATION

	Wandfluh documentation	
Wandfluh electronics general	register	1.13
Proportional directional valves	register	1.10
Proportional pressure valves	register	2.3
Proportional flow control valves	register	2.6

DESIGN

The amplifier module can be parameterised by means of the parameterisation software «PASO-SD7» through the USB-interface. In addition, the parameterisation software makes a data analysis possible. The software «PASO-SD7» is supported by Windows 2000 and Windows XP, Vista and Windows 7 with 32/64-Bit. The device control (enable, etc.) as well as the command value setting can be preset via the Profibus DP or locally via digital, resp. analogue inputs. Furthermore the parameterisation as well as an analysis diagnostic are possible via the Profibus DP.

FUNCTION DESCRIPTION

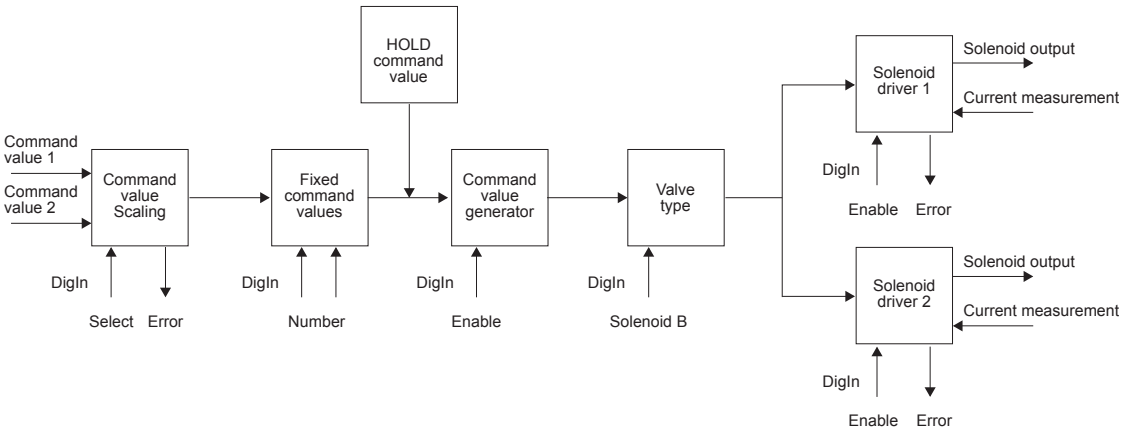

SD7 BASIC AMPLIFIER WITH PROFIBUS DP INTERFACE

Command value scaling
The command value can be applied via the Profibus DP or as a voltage, current or digital signal. For every command value, the input utilised can be selected. The scaling takes place via the parameters „Interface“ and „Reference“. Furthermore every command value can be monitored for a cable break (except for Profibus DP, voltage or digital signal). For every command value a dead band can also be set. Optionally one can operate with two command values. The characteristic of these command values can be adjusted.

Fixed command values
There are 3 fixed command values available, which can be selected via 2 digital inputs.

Command value generator
For each solenoid output two linear ramps for up and down are available which can be adjusted separately.

HOLD command value
If via Profibus DP the device is put into the “HOLD” condition, the respective command value is activated.

Valve type
Here the operating mode is set. In addition it can be selected whether proportional or switching solenoids are driven.

Mode of operation „Command value unipolar (1-Sol)“
Dependent on a unipolar command value signal (voltage, current), the solenoid is driven (e.g. 0….10V correspond to 0….100 % command value, 0....100 % command value correspond to Imin….Imax solenoid driver 1).

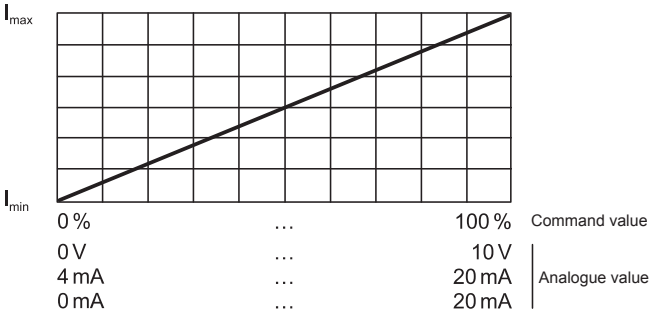

Mode of operation „Command value unipolar (2-Sol)“
Dependent on a unipolar command value signal (voltage, current), one of the two solenoids is driven, acc. to the signal level. The changeover threshold between the two solenoids as standard is in the middle of the values range of the command value signal. (e.g. 0….10V correspond to -100….+100 % command value, -100....0 % command value correspond to Imin….Imax solenoid driver 2, 0….+100 % command value correspond to Imin….Imax solenoid driver 1).

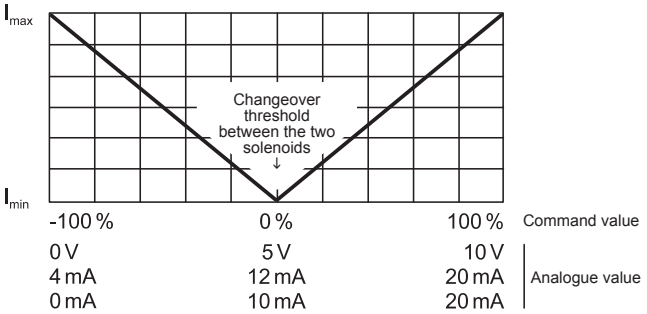

Mode of operation „Command value bipolar (2-Sol)“
Dependent on a bipolar command value signal (voltage), one of the two solenoids is driven, acc. to the signal level. The changeover threshold between the two solenoids as standard is at 0V (e.g. -10….+10V correspond to -100….+100 % command value, -100....0 % command value correspond to Imin….Imax solenoid driver 2, 0….+100 % command value correspond to Imin….Imax solenoid driver 1).

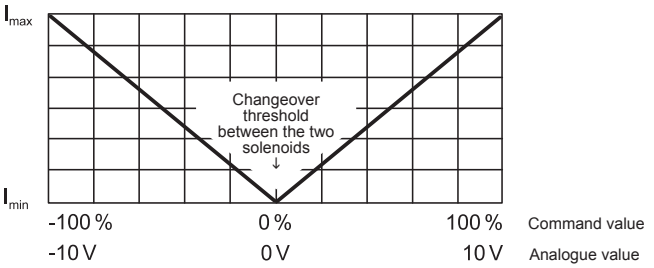

Mode of operation „Command value unipolar (2-Sol with DigIn)“
Dependent on a unipolar command value signal (voltage, current), the solenoid is driven by solenoid driver 1, when the selected digital input is „not activated“, resp. the solenoid by the solenoid driver 2, when the selected digital input is „activated“ (e.g. 0….10V correspond to 0….100 % command value, 0....100 % command value correspond to Imin….Imax solenoid driver 1 or 2).

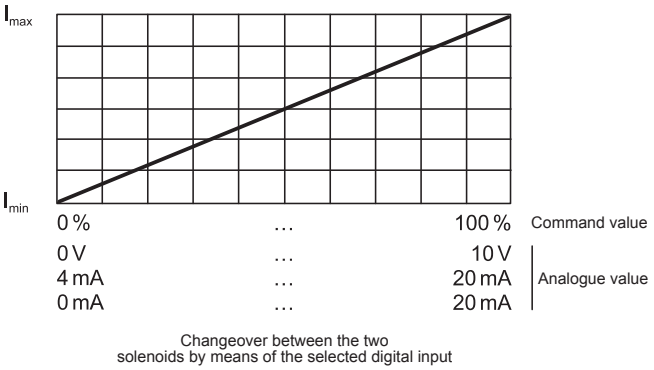

Signal recording
The SD7 amplifier module has a signal recording function, This, by means of PASO, enables the recording of various system signals, such as command value, solenoid currents, etc., which can be represented on a common time axis.

Solenoid driver
Two Pulse-Width-Modulated current outputs are available. To each output, a dither signal is superimposed, whereas dither frequency and dither level can be adjusted separately. For each output, the minimum (Imin) and maximum (Imax) current can be adjusted separately. The solenoid outputs can also be configurated as switching outputs. Therewith for each output a power reduction can be adjusted separately.

Optimisation of characteristic curve
A characteristic curve adjustable per solenoid „Command value input – solenoid current output“ enables an optimised (e.g., linearised) characteristic of the hydraulic system.

CONNECTION EXAMPLE

Mode of operation „command value unipolar (2-Sol)“ or „command value unipolar (2-Sol with DigIn)“

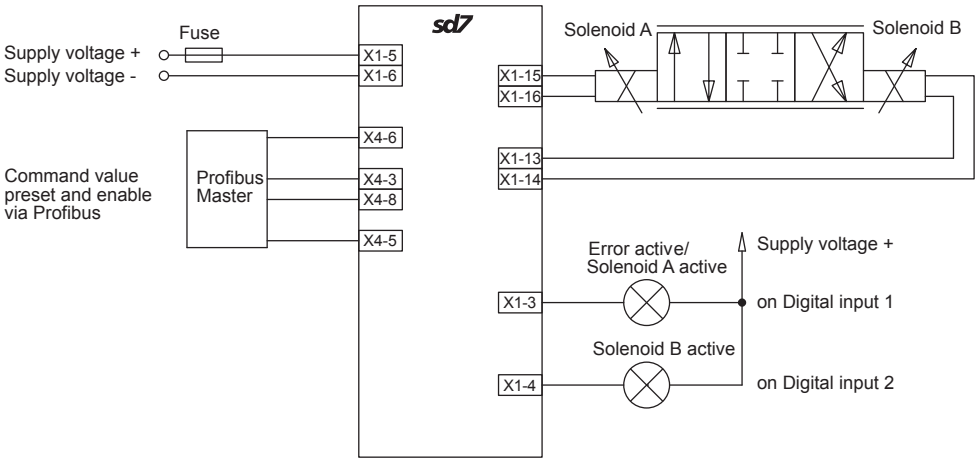

Mode of operation „command value unipolar (1-Sol)“

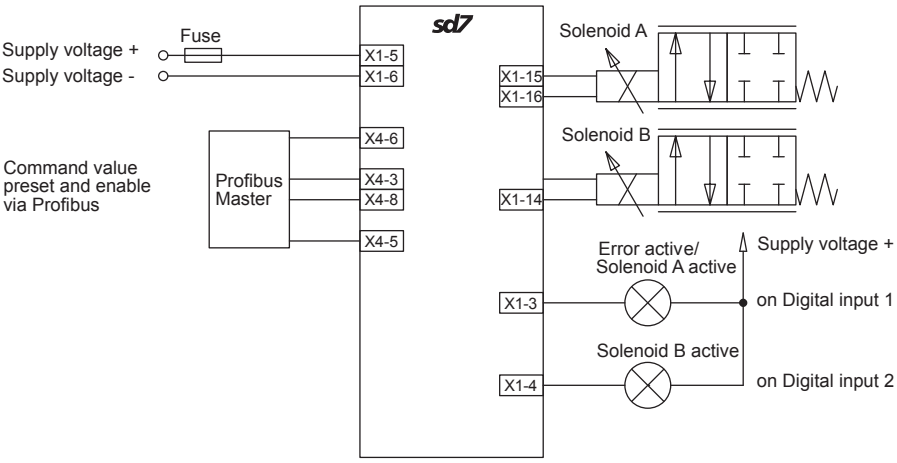

Basic amplifier with HART interface

ELECTRICAL SPECIFICATIONS

Protection class	IP 30 acc. to EN 60 529
Supply voltage	24 VDC or 12 VDC
Voltage range:	
• 24 VDC	21…30 V
• 12 VDC	10,5…15 V
Residual ripple	<10 %
Fuse	low
Current consumption:	
• No-load current	approx. 40 mA
• Maximum current-consumption	non-load current + 1,8 A per solenoid (with 24 VDC) non-load current + 2,3 A per solenoid (with 12 VDC)
Command value signal:	Selectable with software Inputs 1 and 2: Diff. inputs not galvanically separated, for ground potential differences up to 1,5 V 4…+20 mA / 0…+20 mA 0…+10 V (1- or 2-solenoid version, not input 3) -10…+10 V (only 2-solenoid version, not input 3) Input 3: galvanically separated for HART Signal 4 ... +20 mA / 0 ... +20 mA
Resolution	10-Bit (Analogue inputs 1 and 2) 16-Bit (Analogue inputs 3)
Input resistance	Voltage input >18 kΩ Load for current input = 250 Ω
Stabilised output-voltage	10 VDC (with Version 24 VDC) 8 VDC (with version 12 VDC) max. load 30 mA

HART input	via analogue inputs 3
Solenoid current:	
• Minimal current I_{min}	Adjustable 0…950 mA Factory setting 150 mA
• Maximal current I_{max}	Adjustable I_{min}…1,8 A (with 24 VDC) I_{min}…2,3 A (with 12 VDC) Factory setting 700 mA
• Accumulated current-limitation	The accummulated current of the simultaneously powered solenoids depends on the ambient temperature. Further information can be found in the operating instructions.
Dither	Frequency adjustable 20…500 Hz Factory setting 100 Hz Level adjustable 0…400 mA Factory setting 100 mA
Temperature drift	<1 % at ΔT = 40 °C
Digital inputs	Switching threshold high 6…30 VDC Switching threshold low 0…1 VDC
Digital outputs	Low-Side-Switch: U_{max} = 40 VDC I_{max} = -700 mA
Ramps adjustable	0…500 s
Serial interface	USB (receptacle type B)
EMV	
Immunity	EN 61 000-6-2
Emission	EN 61 000-6-4

BLOCK DIAGRAM

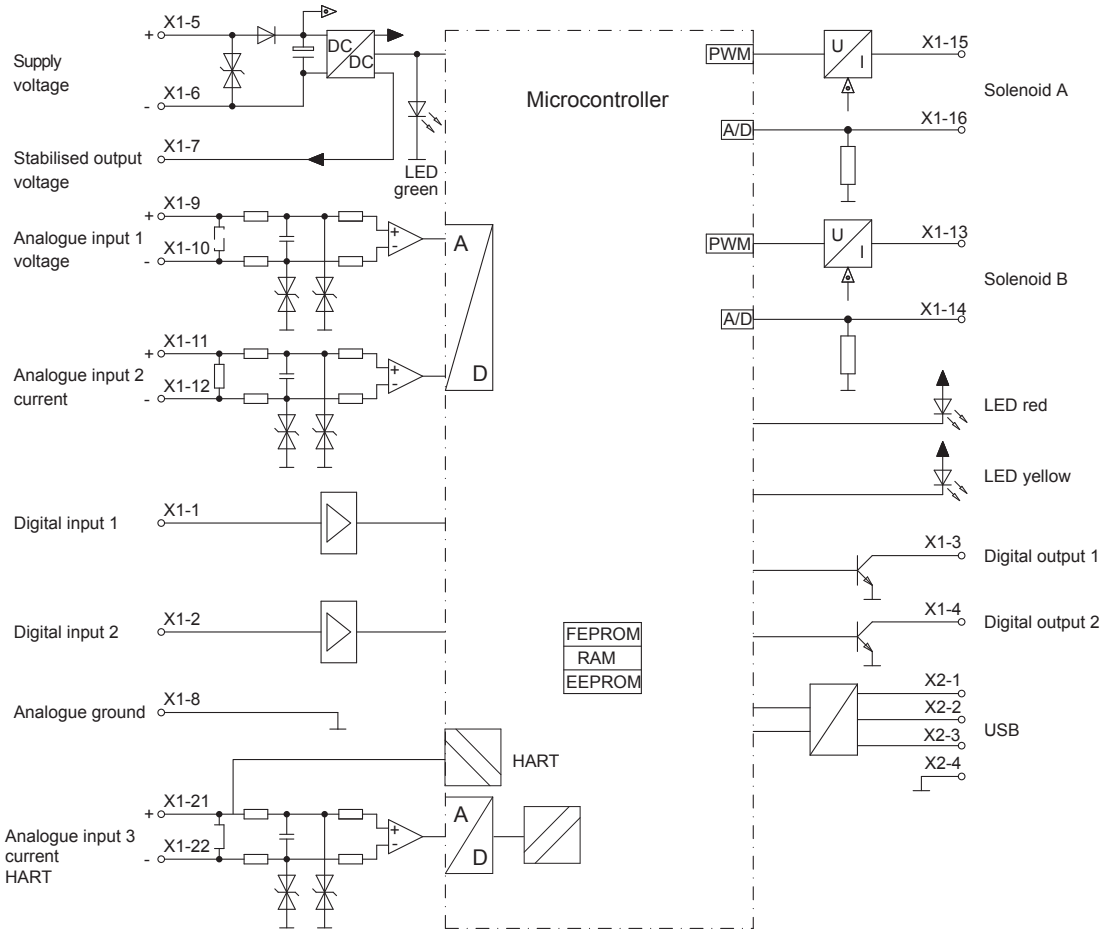

DIMENSIONS

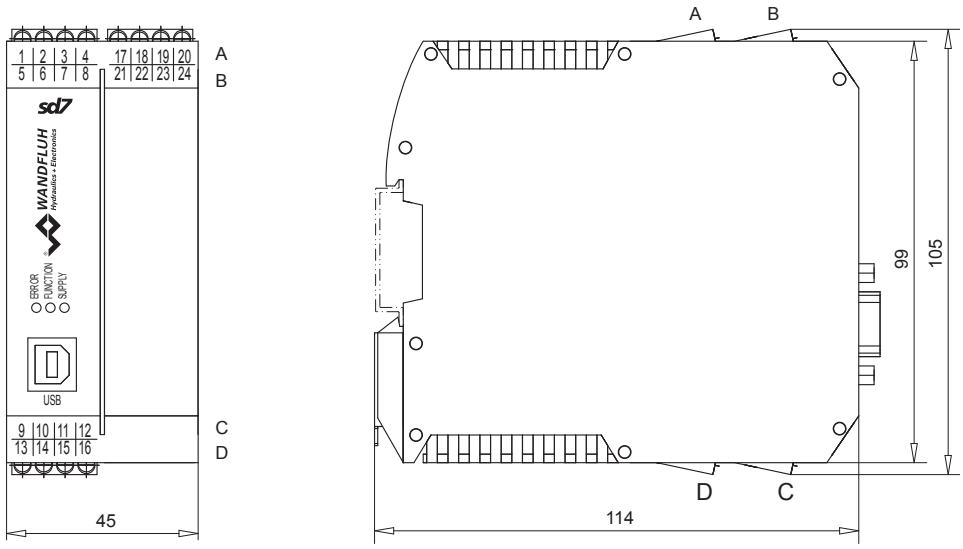

CONNECTOR WIRING DIAGRAM / PIN ASSIGNMENT

USB interface, USB Type B X2

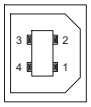

1 = VBUS
2 = D-
3 = D+
4 = GND

REMARK!
The parameterisation cable is not part of the scope of supply (commercially available USB-cable, plug type A to plug type B)

PIN Assignment X1

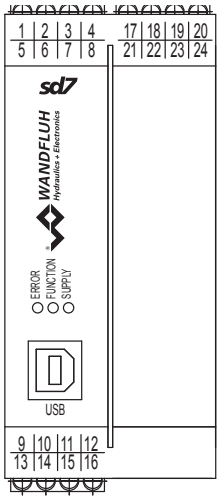

1 = Digital input 1
2 = Digital input 2
3 = Digital output 1
4 = Digital output 2
5 = Supply voltage +
6 = Supply voltage 0 VDC
7 = Stabilised output voltage
8 = Analogue ground
9 = Analogue input 1+
10 = Analogue input 1-
11 = Analogue input 2+
12 = Analogue input 2-
13 = Output solenoid driver 2+
14 = Output solenoid driver 2 -
15 = Output solenoid driver 1+
16 = Output solenoid driver 1 -
21 = Analogue input 3 + HART
22 = Analogue input 3 - HART

Configuration Analogue input

Type description	Analogue input 1	Analogue input 2	Analogue input 3
SD7x0xDx**0**-BH	Voltage	Current	Current
SD7x0xDx**1**-BH	Voltage	Voltage	Current
SD7x0xDx**2**-BH	Current	Current	Current

START-UP

Information regarding installation and commissioning are contained in the information leaflet supplied with the amplifier module and in the operating instructions.

Additional information can be found on our website:
www.wandfluh.com

Free-of-charge download:
• «PASO-SD7» Parameterisation software
• Operating instructions (*pdf)

ADDITIONAL INFORMATION

	Wandfluh documentation	
Wandfluh electronics general	register	1.13
Proportional directional valves	register	1.10
Proportional pressure valves	register	2.3
Proportional flow control valves	register	2.6

DESIGN

The amplifier module can be parameterised by means of the parameterisation software «PASO-SD7» through the USB-interface. In addition, the parameterisation software makes a data analysis possible. The software «PASO-SD7» is supported by Windows 2000 and Windows XP, Vista and Windows 7 with 32/64-Bit. Optionally the amplifier module is equipped with a manual control, which enables the setting of the most important parameters by means of rotary selector switch and push-buttons and therefore makes a commissioning of the amplifier module possible without a PC.

FUNCTION DESCRIPTION

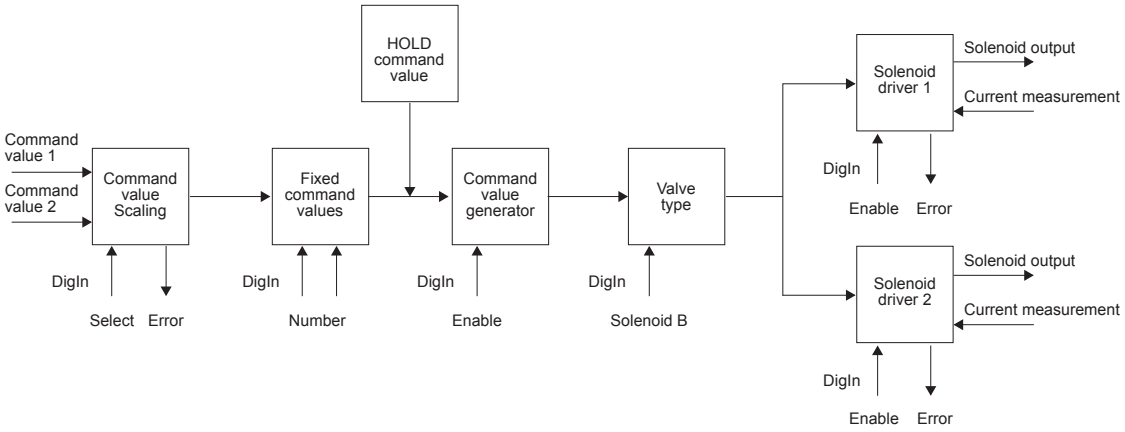

SD7 BASIC AMPLIFIER WITH HART INTERFACE

Command value scaling

The command value can be applied via HART or as a voltage, current or digital signal. For every command value, the input utilised can be selected. The scaling takes place via the parameters „Interface“ and „Reference“. Furthermore every command value can be monitored for a cable break (except for HART, voltage or digital signal). For every command value a dead band can also be set. Optionally one can operate with two command values. The characteristic of these command values can be adjusted.

Fixed command values

There are 3 fixed command values available, which can be selected via 2 digital inputs.

Command value generator

For each solenoid output two linear ramps for up and down are available which can be adjusted separately.

HOLD command value

If via CANopen/J1939 the device is put into the “HOLD” condition, the respective command value is activated.

Valve type

Here the operating mode is set. In addition it can be selected whether proportional or switching solenoids are driven.

Mode of operation „Command value unipolar (1-Sol)“

Dependent on a unipolar command value signal (voltage, current), the solenoid is driven (e.g. 0….10V correspond to 0….100 % command value, 0....100 % command value correspond to Imin….Imax solenoid driver 1).

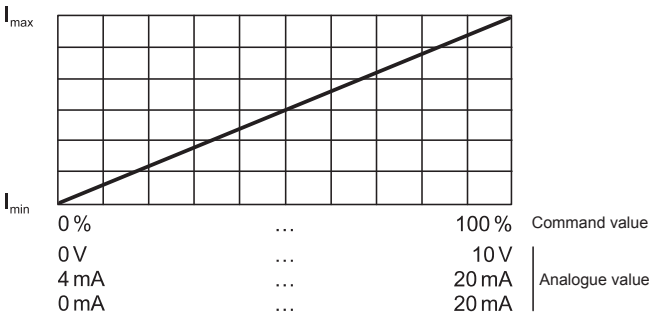

Mode of operation „Command value unipolar (2-Sol)“

Dependent on a unipolar command value signal (voltage, current), one of the two solenoids is driven, acc. to the signal level. The changeover threshold between the two solenoids as standard is in the middle of the values range of the command value signal. (e.g. 0….10V correspond to -100….+100 % command value, -100....0 % command value correspond to Imin….Imax solenoid driver 2, 0….+100 % command value correspond to Imin….Imax solenoid driver 1).

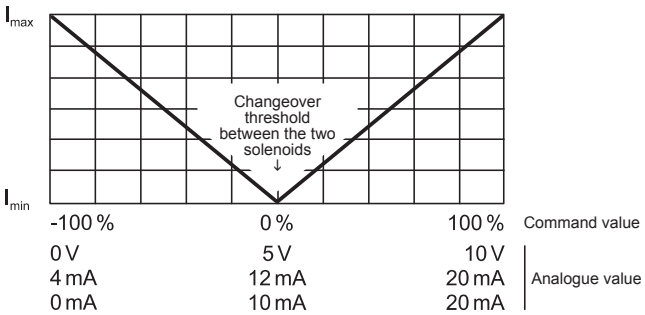

Mode of operation „Command value bipolar (2-Sol)“
Dependent on a bipolar command value signal (voltage), one of the two solenoids is driven, acc. to the signal level. The changeover threshold between the two solenoids as standard is at 0V (e.g. -10….+10V correspond to -100….+100 % command value, -100....0 % command value correspond to Imin….Imax solenoid driver 2, 0….+100 % command value correspond to Imin….Imax solenoid driver 1).

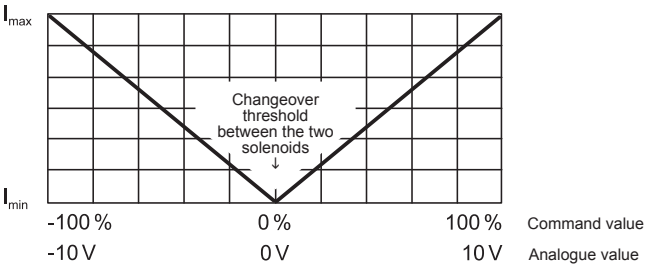

Mode of operation „Command value unipolar (2-Sol with DigIn)“
Dependent on a unipolar command value signal (voltage, current), the solenoid is driven by solenoid driver 1, when the selected digital input is „not activated“, resp. the solenoid by the solenoid driver 2, when the selected digital input is „activated“ (e.g. 0….10V correspond to 0….100 % command value, 0....100 % command value correspond to Imin….Imax solenoid driver 1 or 2).

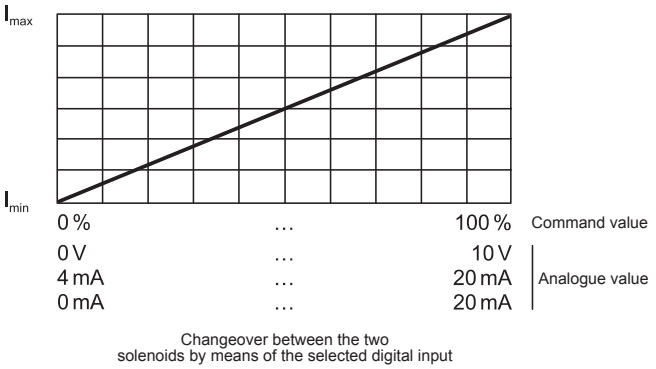

Signal recording
The SD7 amplifier module has a signal recording function, This, by means of PASO, enables the recording of various system signals, such as command value, solenoid currents, etc., which can be represented on a common time axis.

Solenoid driver
Two Pulse-Width-Modulated current outputs are available. To each output, a dither signal is superimposed, whereas dither frequency and dither level can be adjusted separately. For each output, the minimum (Imin) and maximum (Imax) current can be adjusted separately. The solenoid outputs can also be configurated as switching outputs. Therewith for each output a power reduction can be adjusted separately.

Optimisation of characteristic curve
A characteristic curve adjustable per solenoid „Command value input – solenoid current output“ enables an optimised (e.g., linearised) characteristic of the hydraulic system.

CONNECTION EXAMPLE

Mode of operation „command value unipolar (2-Sol)“ or „command value unipolar (2-Sol with DigIn)“

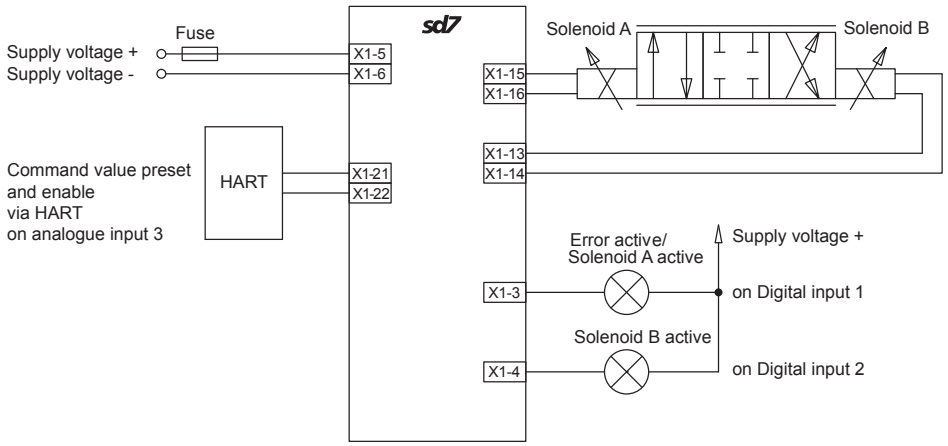

Mode of operation „command value unipolar (1-Sol)“

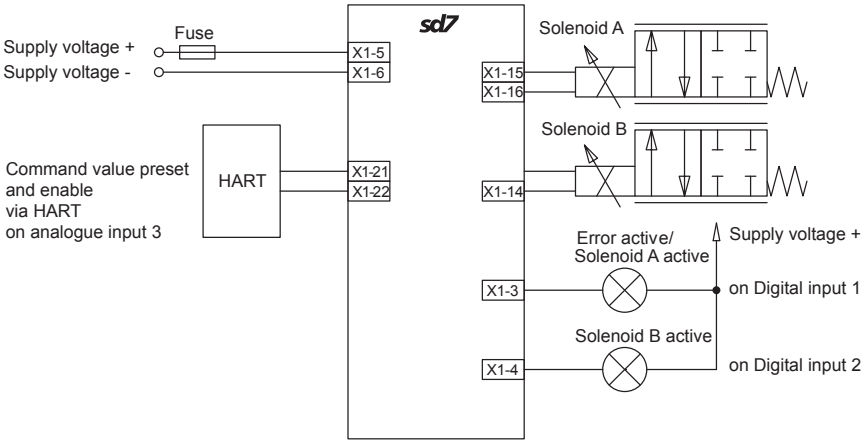

Enhanced amplifier with analogue interface

ELECTRICAL SPECIFICATIONS

Protection class	IP 30 acc. to EN 60 529
Supply voltage	24 VDC or 12 VDC
Voltage range:	
• 24 VDC	21…30 V
• 12 VDC	10,5…15 V
Residual ripple	<10 %
Fuse	low
Current consumption:	
• No-load current	approx. 40 mA
• Maximum current consumption	non-load current + 1,8 A per solenoid (with 24 VDC) non-load current + 2,3 A per solenoid (with 12 VDC)
Command value signal:	Selectable with software Diff. inputs not galvanically separated, for ground potential differences up to 1,5 V 4…+20 mA / 0…+20 mA 0…+10 V (1- or 2-solenoid version) -10…+10 V (only 2-solenoid version)
Resolution	10-Bit (Analogue inputs 1 and 2) 16-Bit (Analogue inputs 3 and 4)
Input resistance	Voltage input >18 kΩ Load for current input = 250 Ω
Analogue output	Voltage output ± 10 VDC max. Current output ± 3 mA
Stabilised output voltage	10 VDC (with 24 VDC) 8 VDC (with 12 VDC) max. load 30 mA

Solenoid current:	
• Minimal current I_{min}	Adjustable 0…950 mA Factory setting 150 mA
• Maximal current I_{max}	Adjustable I_{min}…1,8 A (with 24 VDC) I_{min}…2,3 A (with 12 VDC) Factory setting 700 mA
• Accumulated current limitation	The accummulated current of the simultaneously powered solenoids depends on the ambient temperature. Further information can be found in the operating instructions.
Dither	Frequency adjustable 20…500 Hz Factory setting 100 Hz Level adjustable 0…400 mA Factory setting 100 mA
Temperature drift	<1 % at ΔT = 40 °C
Digital inputs	Switching threshold high 6…30 VDC Switching threshold low 0…1 VDC Digital input 5 – 7 can be used as frequency input (frequencies 0…5 kHz) and as PWM input (automatic frequency recognition)
Digital outputs	Low-Side-Switch: U_{max} = 40 VDC I_{max} = -700 mA
Ramps adjustable	0…500 s
Serial interface	USB (receptacle type B)
EMV	
Immunity	EN 61 000-6-2
Emission	EN 61 000-6-4

BLOCK DIAGRAM

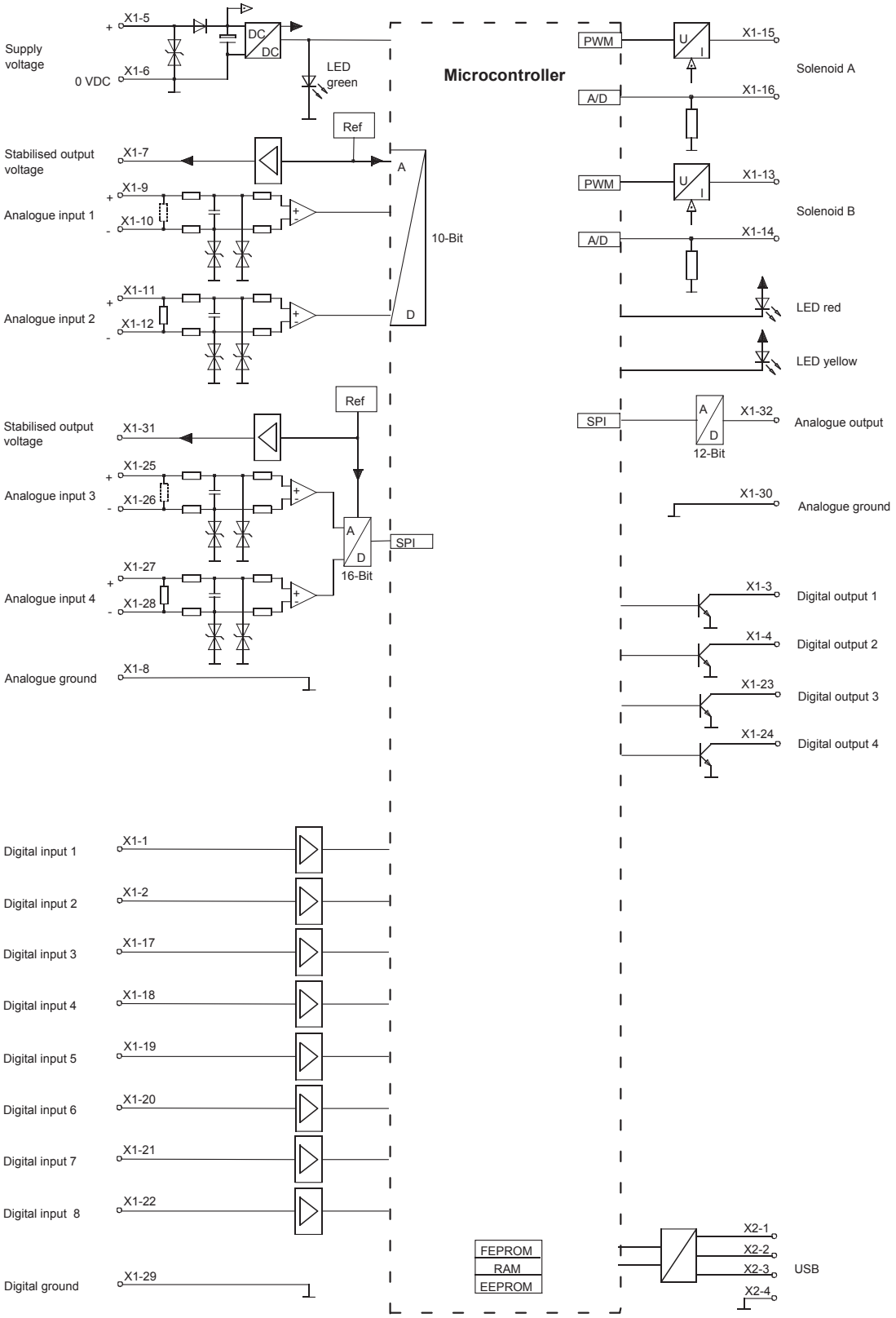

DIMENSIONS

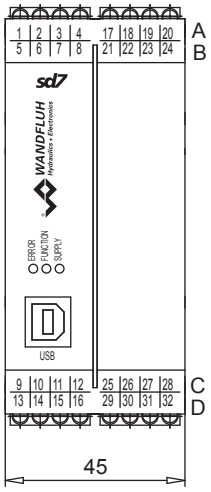

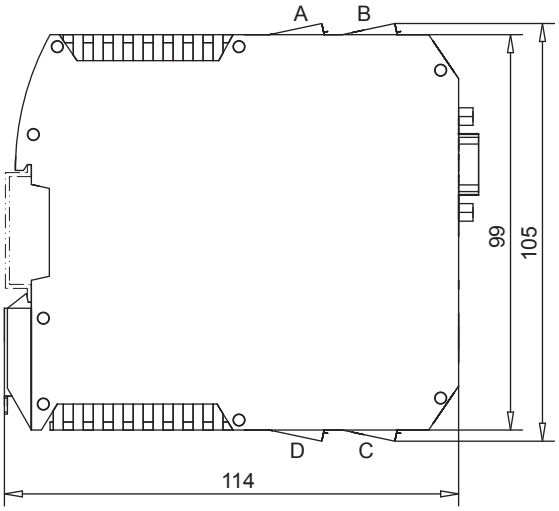

CONNECTOR WIRING DIAGRAM / PIN ASSIGNMENT

USB interface, USB Type B X2

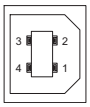

1 = VBUS
2 = D -
3 = D +
4 = GND

REMARK!
The parameterisation cable is not part of the scope of supply (commercially available USB-cable, plug type A to plug type B)

PIN Assignment X1

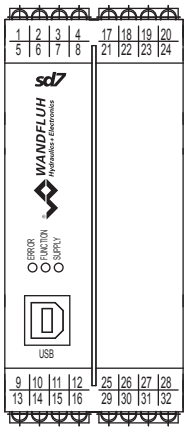

1 = Digital input 1
2 = Digital input 2
3 = Digital output 1
4 = Digital output 2
5 = Supply Analogue input +
6 = Supply voltage 0 VDC
7 = Stabilised output voltage
8 = Analogue ground
9 = Analogue input 1 +
10 = Analogue input 1 -
11 = Analogue input 2 +
12 = Analogue input 2 -
13 = Output solenoid 2 +
14 = Output solenoid 2 -
15 = Output solenoid 1 +
16 = Output solenoid 1 -
17 = Digital input 3
18 = Digital input 4
19 = Digital input 5
20 = Digital input 6
21 = Digital input 7
22 = Digital input 8
23 = Digital output 3
24 = Digital output 4
25 = Analogue input 3 +
26 = Analogue input 3 -
27 = Analogue input 4 +
28 = Analogue input 4 -
29 = Digital ground
30 = Analogue ground
31 = Stabilised output voltage
32 = Analogue output

START-UP

Information regarding installation and commissioning are contained in the information leaflet supplied with the amplifier module and in the operating instructions.

Additional information can be found on our website:
www.wandfluh.com

Free-of-charge download:
• «PASO-DSV / SD7» Parameterisation software
• Operating instructions (*.pdf)

Configuration Analogue input

Type description	Analogue inputs			
	Nr. 1	Nr. 2	Nr. 3	Nr. 4
SD731xDx**4**-BA	Voltage	Current	Voltage	Current
SD731xDx**5**-BA	Voltage	Voltage	Voltage	Voltage
SD731xDx**6**-BA	Current	Current	Current	Current
SD731xDx**7**-BA	Voltage	Voltage	Current	Current
SD731xDx**8**-BA	Current	Current	Voltage	Voltage

ADDITIONAL INFORMATION

	Wandfluh documentation	
Wandfluh electronics general	register	1.13
Proportional directional valves	register	1.10
Proportional pressure valves	register	2.3
Proportional flow control valves	register	2.6

DESIGN

The amplifier module can be parameterised by means of the parameterisation software «PASO-SD7» through the USB-interface. In addition, the parameterisation software makes a data analysis possible.

The software «PASO-SD7» is supported by Windows 2000 and Windows XP, Vista and Windows 7 with 32/64-Bit.

FUNCTION DESCRIPTION

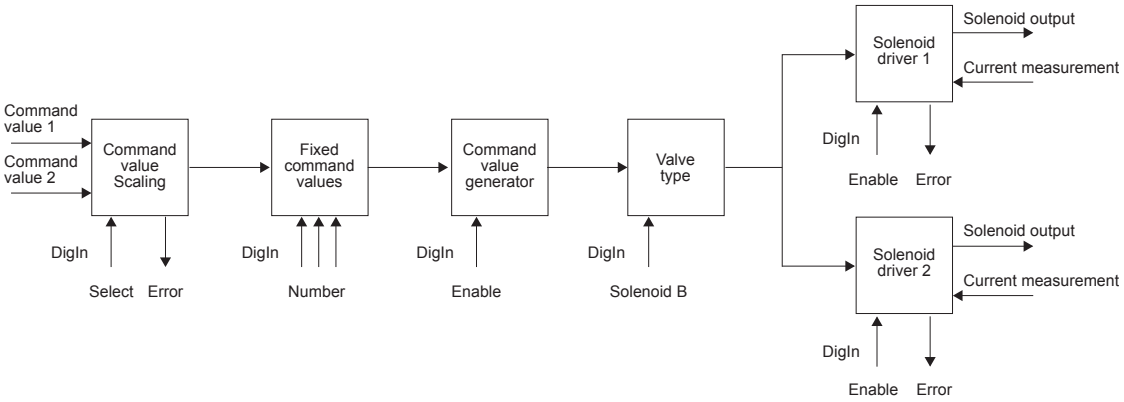

SD7 ENHANCED AMPLIFIER WITH ANALOGUE INTERFACE

Command value scaling

The command value can be applied as a voltage, current, digital, frequency or PWM signal. For every command value, the input utilised can be selected. The scaling takes place via the parameters „Interface“ and „Reference“. Furthermore every command value can be monitored for a cable break (except for voltage and digital signal). For every command value a dead band can also be set. Optionally one can operate with two command values. The characteristic of these command values can be adjusted.

Fixed command values

There are 7 fixed command values available, which can be selected via 3 digital inputs.

Command value generator

For each solenoid output two linear ramps for up and down are available which can be adjusted separately.

Valve type

Here the operating mode is set. In addition it can be selected whether proportional or switching solenoids are driven.

Mode of operation „Command value unipolar (1-Sol)“

Dependent on a unipolar command value signal (voltage, current, frequency or PWM), the solenoid is driven (e.g. 0...10V correspond to 0...100 % command value, 0...100 % command value correspond to Imin...Imax solenoid driver 1).

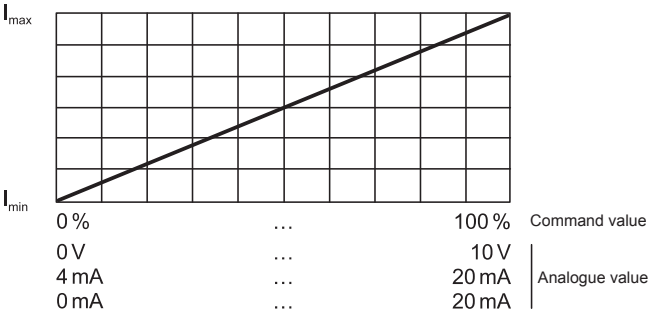

Mode of operation „Command value unipolar (2-Sol)“

Dependent on a unipolar command value signal (voltage, current, frequency or PWM), one of the two solenoids is driven, acc. to the signal level. The changeover threshold between the two solenoids as standard is in the middle of the values range of the command value signal. (e.g. 0….10V correspond to -100….+100 % command value, -100 %....0 % command value correspond to Imin….Imax solenoid driver 2, 0….+100 % command value correspond to Imin….Imax solenoid driver 1).

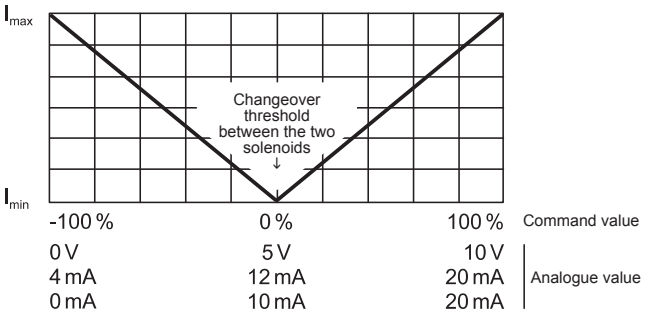

Mode of operation „Command value bipolar (2-Sol)“

Dependent on a bipolar command value signal (voltage), one of the two solenoids is driven, acc. to the signal level. The changeover threshold between the two solenoids as standard is at 0V (e.g. -10….+10V correspond to -100….+100 % command value, -100....0 % command value correspond to Imin….Imax solenoid driver 2, 0….+100 % command value correspond to Imin….Imax solenoid driver 1).

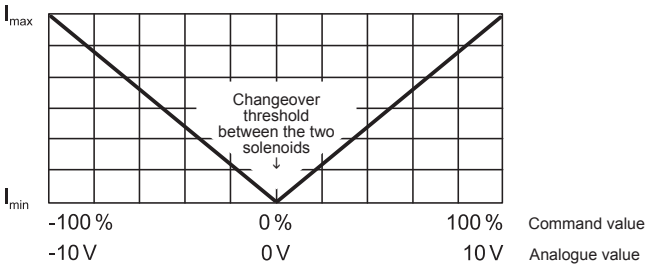

Mode of operation „Command value unipolar (2-Sol with DigIn)“
Dependent on a unipolar command value signal (voltage, current, frequency or PWM), the solenoid is driven by solenoid driver 1, when the selected digital input is „not activated“, resp. the solenoid by the solenoid driver 2, when the selected digital input is „activated“ (e.g. 0….10V correspond to 0….100 % command value, 0....100 % command value correspond to Imin….Imax solenoid driver 1 or 2).

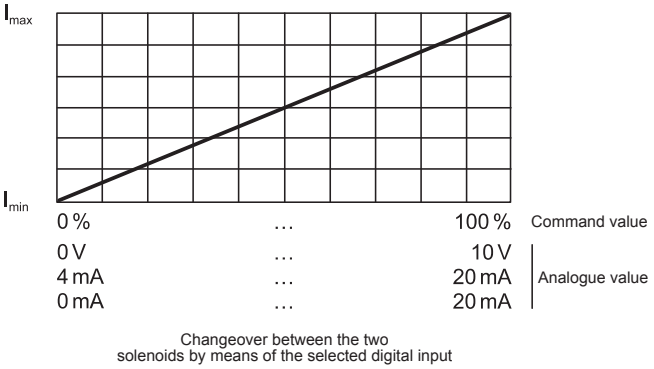

Signal recording
The SD7 amplifier module has a signal recording function, This, by means of PASO, enables the recording of various system signals, such as command value, solenoid currents, etc., which can be represented on a common time axis.

Solenoid driver
Two Pulse-Width-Modulated current outputs are available. To each output, a dither signal is superimposed, whereas dither frequency and dither level can be adjusted separately. For each output, the minimum (Imin) and maximum (Imax) current can be adjusted separately. The solenoid outputs can also be configurated as switching outputs. Therewith for each output a power reduction can be adjusted separately.

Optimisation of characteristic curve
A characteristic curve adjustable per solenoid „Command value input – solenoid current output“ enables an optimised (e.g., linearised) characteristic of the hydraulic system.

CONNECTION EXAMPLE

Mode of operation „command value unipolar (2-Sol)“ or „command value unipolar (2-Sol with DigIn)“

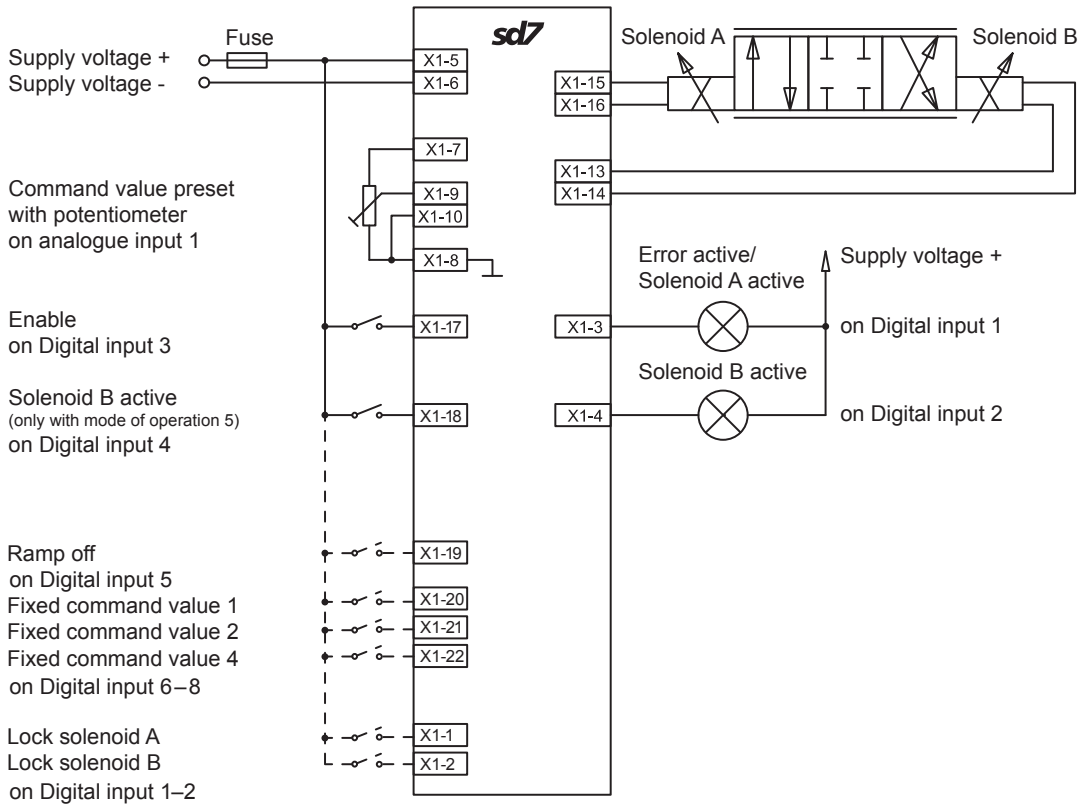

Enhanced amplifier with CANopen/J1939 interface

ELECTRICAL SPECIFICATIONS

Protection class	IP 30 acc. to EN 60 529
Device receptacle	
CANopen (male)	DSUB, 9-polig
Mating connector	Plug (female) DSUB, 9-pole
Supply voltage	24 VDC or 12 VDC
Voltage range:	
• 24 VDC	21,0…30,0 VDC
• 12 VDC	10,5…15,0 VDC
Residual ripple	<10 %
Fuse	low
Current consumption:	
• Non-load current	approx. 40 mA
• Maximum current consumption	non-load current + 1,8 A per solenoid (with 24 VDC) non-load current + 2,3 A per solenoid (with 12 VDC)
Analogue inputs:	Selectable with software Diff. inputs not galvanically separated, for ground potential differences up to 1,5 V 4…+20 mA / 0…+20 mA 0…+10 V (1- or 2-solenoid version) -10…+10 V (only 2-solenoid version)
Resolution	10-Bit (Analogue inputs 1 and 2) 16-Bit (Analogue inputs 3 and 4)
Input resistance	Voltage input >18 kΩ Load for current input = 250 Ω
Analogue output	Voltage output ± 10 VDC max. current output ± 3 mA
Stabilised output voltage	10 VDC (with 24 VDC) 8 VDC (with 12 VDC) max. load 30 mA
Bus topology	Line, differential signal transmission
Potential separation	CANopen/J1939 to «SD7» electronics 500 VDC

Solenoid current:	
• Minimal current I_{min}	Adjustable 0…950 mA Factory setting 150 mA
• Maximal current I_{max}	Adjustable I_{min}…1,8 A (with 24 VDC) I_{min}…2,3 A (with 12 VDC) Factory setting 700 mA
• Accumulated current-limitation	The accummulated current of the simultaneously powered solenoids depends on the ambient temperature. Further information can be found in the operating instructions..
Dither	Frequenz adjustable 2…500 Hz Factory setting 100 Hz Level adjustable 0…400 mA Factory setting 100 mA
Temperaturdrift	<1 % at ΔT = 40 °C
Digital inputs	Switching threshold high 6…30 VDC Switching threshold low 0…1 VDC Digital input 5 – 7 can be used as frequency input (frequencies 0…5 kHz) and as PWM input (automatic frequency recognition)
Digital outputs	Low-Side-Switch: U_{max} = 40 VDC I_{max} = -700 mA
Ramps adjustable	Adjustable 0…500 s
Serial interface	USB (receptacle type B)
EMV	
• Immunity	EN 61 000-6-2
• Emission	EN 61 000-6-4

DIMENSIONS

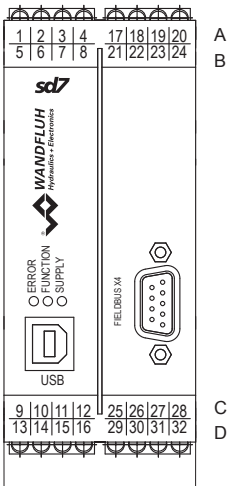

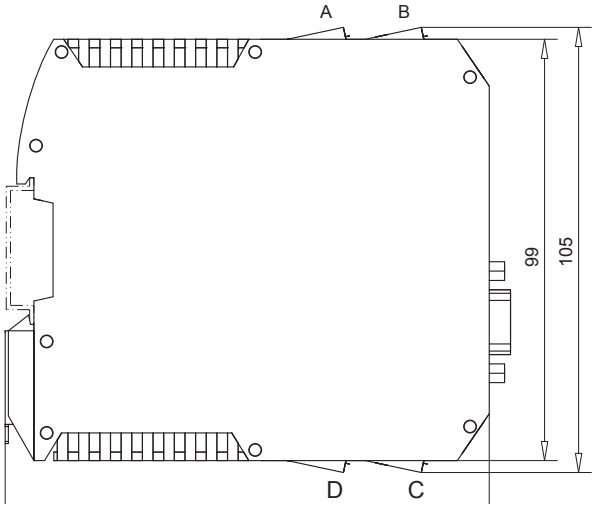

BLOCK DIAGRAM

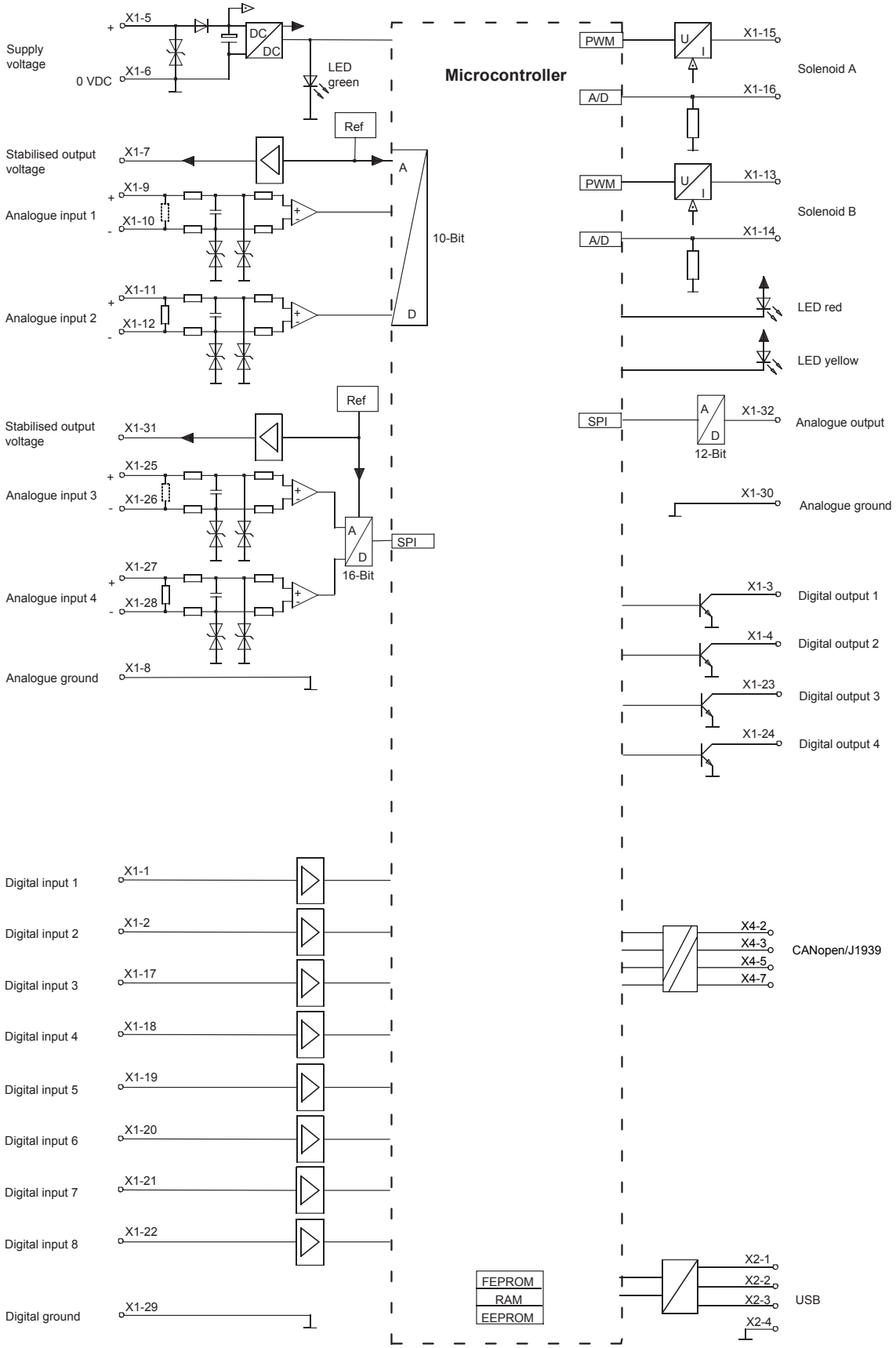

CONNECTOR WIRING DIAGRAM / PIN ASSIGNMENT

USB interface, USB Type B X2

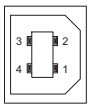

1 = VBUS
2 = D -
3 = D +
4 = GND

REMARK!
The parameterisation cable is not part of the scope of supply (commercially available USB-cable, plug type A to plug type B)

Device receptacle CANopen/J1939 (male) X4

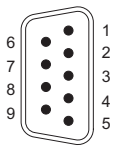

CANOPEN/J1939

1 = Reserved
2 = CANLow
3 = CANGnd
4 = Reserved
5 = CANShield
6 = Reserved
7 = CANHigh
8 = Reserved
9 = Reserved

The mating connector (plug male, DSUB, 9-pole) is not included in the delivery.

PIN Assignment X1

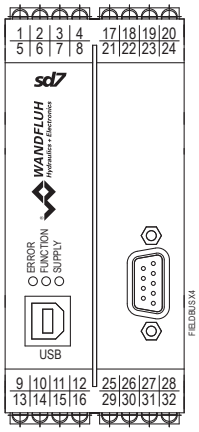

1 = Digital input 1
2 = Digital input 2
3 = Digital output 1
4 = Digital output 2
5 = Supply Analogue input +
6 = Supply voltage 0 VDC
7 = Stabilised output voltage
8 = Analogue ground
9 = Analogue input 1 +
10 = Analogue input 1 -
11 = Analogue input 2 +
12 = Analogue input 2 -
13 = Output solenoid 2 +
14 = Output solenoid 2 -
15 = Output solenoid 1 +
16 = Output solenoid 1 -
17 = Digital input 3
18 = Digital input 4
19 = Digital input 5
20 = Digital input 6
21 = Digital input 7
22 = Digital input 8
23 = Digital output 3
24 = Digital output 4
25 = Analogue input 3 +
26 = Analogue input 3 -
27 = Analogue input 4 +
28 = Analogue input 4 -
29 = Digital-ground
30 = Analog-Masse
31 = Stabilised output voltage
32 = Analogue output

Configuration Analogue input

Type description	Analogue inputs			
	No. 1	No. 2	No. 3	No. 4
SD7362Dx**4**-BC	Voltage	Current	Voltage	Current
SD7362Dx**5**-BC	Voltage	Voltage	Voltage	Voltage
SD7362Dx**6**-BC	Current	Strom	Current	Current
SD7362Dx**7**-BC	Voltage	Spannung	Current	Current
SD7362Dx**8**-BC	Current	Current	Voltage	Voltage

START-UP

Information regarding installation and commissioning are contained in the information leaflet supplied with the amplifier module and in the operating instructions.

Additional information can be found on our website:
www.wandfluh.com

Free-of-charge download:
• «PASO-SD7» Parameterisation software
• Operating instructions (*.pdf)
• EDS-file «WAGOB8E.eds»

ADDITIONAL INFORMATION

	Wandfluh documentation	
Wandfluh electronics general	register	1.13
Proportional directional valves	register	1.10
Proportional pressure valves	register	2.3
Proportional flow control valves	register	2.6

DESIGN

The amplifier module can be parameterised by means of the parameterisation software «PASO-SD7» through the USB-interface. In addition, the parameterisation software makes a data analysis possible. The software «PASO-SD7» is supported by Windows 2000 and Windows XP, Vista and Windows 7 with 32/64-Bit. The device control (enable, etc.) as well as the command value setting can be preset via the CANopen/J1939 or locally via digital, resp. analogue inputs. Furthermore the parameterisation as well as an analysis/diagnostic are possible via the CANopen (with J1939 on request).

FUNCTION DESCRIPTION

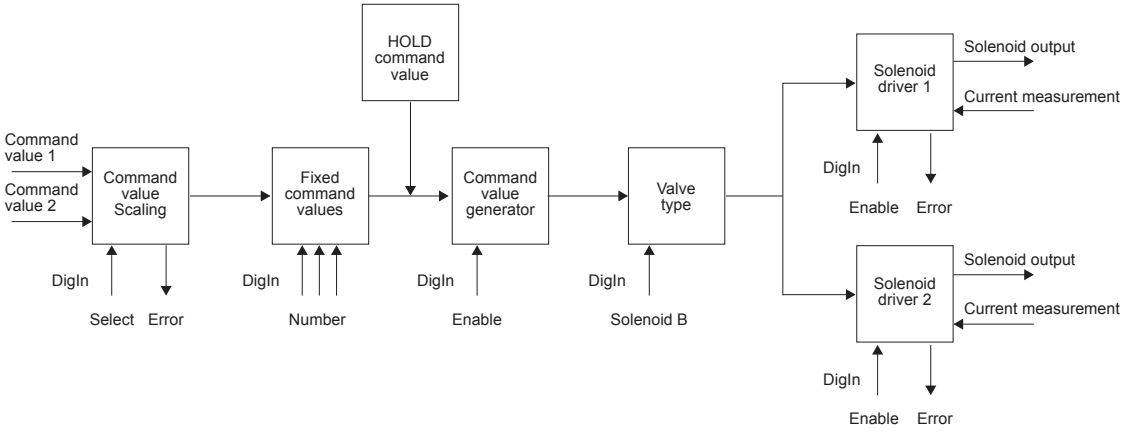

SD7 ENHANCED AMPLIFIER WITH CANopen/J1939 INTERFACE

Command value scaling

The command value can be applied via the CANopen/J1939 or as a voltage, current, digital, frequency or PWM-signal. For every command value, the input utilised can be selected. The scaling takes place via the parameters „Interface“ and „Reference“. Furthermore every command value can be monitored for a cable break (except for CANopen/J1939, voltage or digital signal). For every command value a dead band can also be set. Optionally one can operate with two command values. The characteristic of these command values can be adjusted.

Fixed command values

There are 7 fixed command values available, which can be selected via 3 digital inputs.

Command value generator

For each solenoid output two linear ramps for up and down are available which can be adjusted separately.

HOLD command value

If via CANopen/J1939 the device is put into the “HOLD” condition, the respective command value is activated.

Valve type

Here the operating mode is set. In addition it can be selected whether proportional or switching solenoids are driven.

Mode of operation „Command value unipolar (1-Sol)“

Dependent on a unipolar command value signal (voltage, current, frequency or PWM), the solenoid is driven (e.g. 0….10V correspond to 0….100 % command value, 0....100 % command value correspond to Imin….Imax solenoid driver 1).

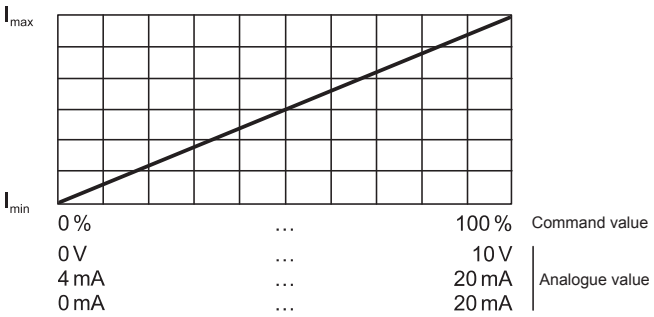

Mode of operation „Command value unipolar (2-Sol)“

Dependent on a unipolar command value signal (voltage, current, frequency or PWM), one of the two solenoids is driven, acc. to the signal level. The changeover threshold between the two solenoids as standard is in the middle of the values range of the command value signal. (e.g. 0….10V correspond to -100….+100 % command value, -100....0 % command value correspond to Imin….Imax solenoid driver 2, 0….+100 % command value correspond to Imin….Imax solenoid driver 1).

Mode of operation „Command value bipolar (2-Sol)“
Dependent on a bipolar command value signal (voltage), one of the two solenoids is driven, acc. to the signal level. The changeover threshold between the two solenoids as standard is at 0V (e.g. -10….+10V correspond to -100….+100 % command value, -100....0 % command value correspond to Imin….Imax solenoid driver 2, 0….+100 % command value correspond to Imin….Imax solenoid driver 1).

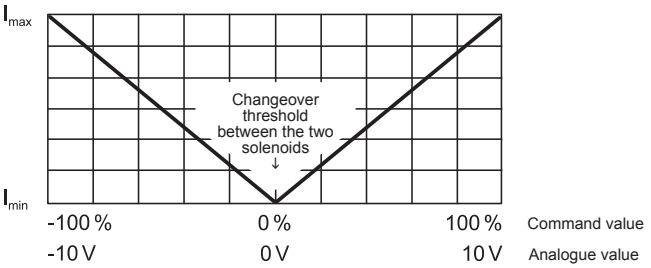

Mode of operation „Command value unipolar (2-Sol with DigIn)“
Dependent on a unipolar command value signal (voltage, current, frequency or PWM), the solenoid is driven by solenoid driver 1, when the selected digital input is „not activated“, resp. the solenoid by the solenoid driver 2, when the selected digital input is „activated“ (e.g. 0….10V correspond to 0….100 % command value, 0....100 % command value correspond to Imin….Imax solenoid driver 1 or 2).

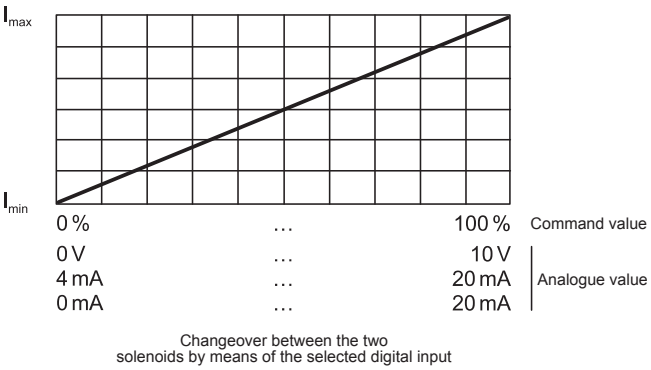

Signal recording
The SD7 amplifier module has a signal recording function, This, by means of PASO, enables the recording of various system signals, such as command value, solenoid currents, etc., which can be represented on a common time axis.

Solenoid driver
Two Pulse-Width-Modulated current outputs are available. To each output, a dither signal is superimposed, whereas dither frequency and dither level can be adjusted separately. For each output, the minimum (Imin) and maximum (Imax) current can be adjusted separately. The solenoid outputs can also be configurated as switching outputs. Therewith for each output a power reduction can be adjusted separately.

Optimisation of characteristic curve
A characteristic curve adjustable per solenoid „Command value input – solenoid current output“ enables an optimised (e.g., linearised) characteristic of the hydraulic system.

CONNECTION EXAMPLE

Mode of operation „command value unipolar (2-Sol)“ or „command value unipolar (2-Sol with DigIn)“

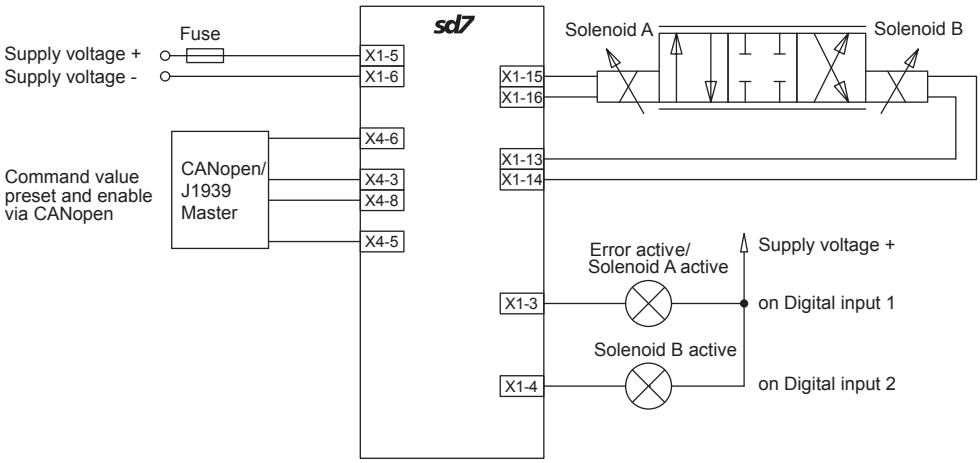

Mode of operation „command value unipolar (1-Sol)“

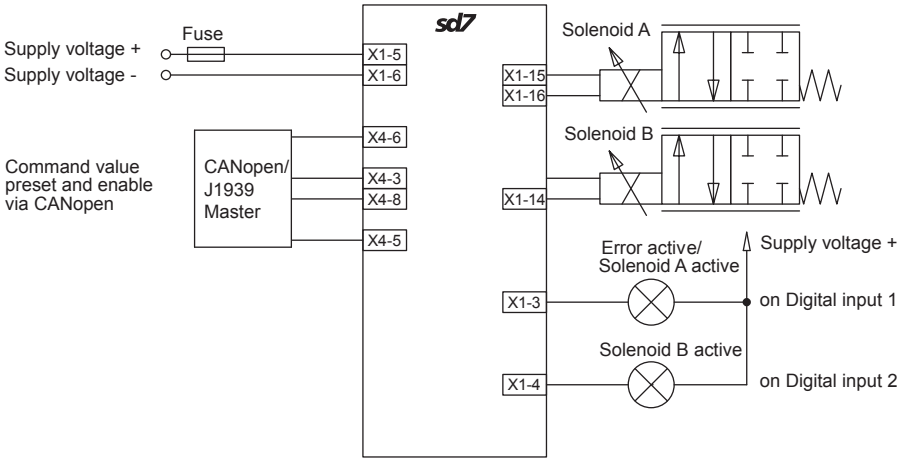

Enhanced amplifier with Profibus DP interface

ELECTRICAL SPECIFICATIONS

Protection class	IP 30 acc. to EN 60 529
Device receptacle	
Profibus (female)	DSUB, 9-pole
Mating connector	Plug (male),DSUB, 9-pole
Supply voltage	24 VDC or 12 VDC
Voltage range:	
• 24 VDC	21…30 V
• 12 VDC	10,5…15 V
Residual ripple	<10 %
Fuse	low
Current consumption:	
• Non-load current	approx. 40 mA
• Maximum current consumption	non-load current + 1,8 A per solenoid (with 24 VDC) non-load current + 2,3 A per solenoid (with 12 VDC)
Command value signal:	Selectable with software Diff. inputs not galvanically separated, for ground potential differences up to 1,5 V 4…+20 mA / 0…+20 mA 0…+10 V (1- or 2-solenoid version) -10…+10 V (only 2-solenoid version)
Resolution	10-Bit (Analogue inputs 1 and 2) 16-Bit (Analogue inputs 3 and 4)
Input resistance	Voltage input >18 kΩ Load for current input = 250 Ω
Analogue output	Voltage output ± 10 VDC max. current output ± 3 mA
Stabilised output voltage	10 VDC (with 24 VDC) 8 VDC (with 12 VDC) max. load 30 mA
Bus topology	Line, differential signal transmission
Potential separation	Profibus to «SD7» electronics 500 VDC
Solenoid current:	
• Minimal current I_{min}	Adjustable 0…950 mA Factory setting 150 mA
• Maximal current I_{max}	Adjustable I_{min}…1,8 A (with 24 VDC) I_{min}…2,3 A (with 12 VDC) Factory setting 700 mA
• Accumulated current limitation	The accummulated current of the simultaneously powered solenoids depends on the ambient temperature. Further information can be found in the operating instructions.
Dither	Frequency adjustable 20…500 Hz Factory setting 100 Hz Level adjustable 0…400 mA Factory setting 100 mA
Temperature drift	<1 % at ΔT = 40 °C
Digital inputs	Switching threshold high 6…30 VDC Switching threshold low 0…1 VDC Digital input 5 – 7 can be used as frequency input (frequencies 0…5 kHz) and as PWM input (automatic frequency recognition)
Digital outputs	Low-Side-Switch: U_{max} = 40 VDC I_{max} = -700 mA
Ramps adjustable	0…500 s
Serial interface	USB (receptacle type B)
EMV	
Immunity	EN 61 000-6-2
Emission	EN 61 000-6-4

DIMENSIONS

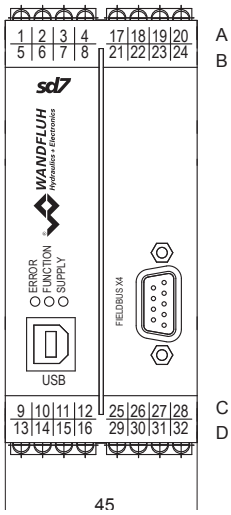

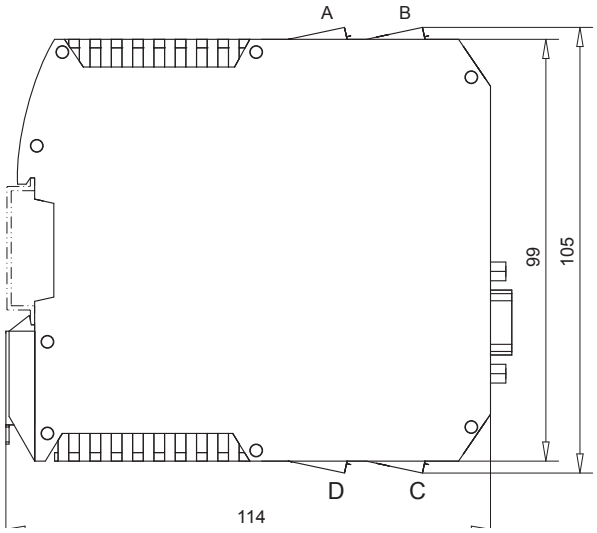

BLOCK DIAGRAM

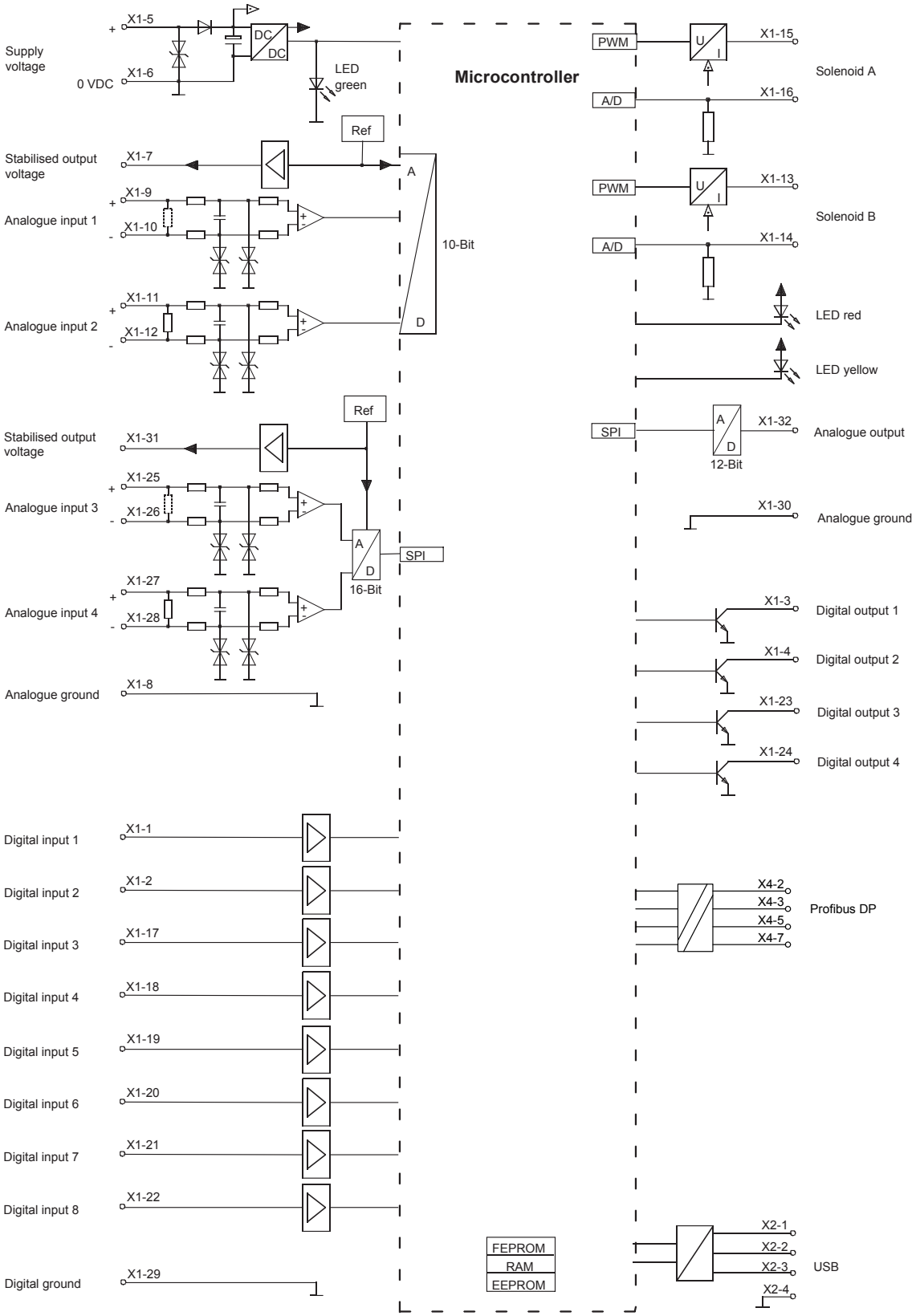

CONNECTOR WIRING DIAGRAM / PIN ASSIGNMENT

USB interface, USB Type B X2

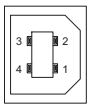

1 = VBUS
2 = D -
3 = D +
4 = GND

REMARK!
The parameterisation cable is not part of the scope of supply (commercially available USB-cable, plug type A to plug type B)

Device receptacle Profibus DP (female) X4

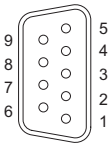

PROFIBUS

1 = Reserved
2 = Reserved
3 = RxD/TxD-P
4 = Reserved
5 = DGND
6 = VP
7 = Reserved
8 = RxD/TxD-N
9 = Reserved

The mating connector (plug male, DSUB, 9-pole) is not included in the delivery.

PIN Assignment X1

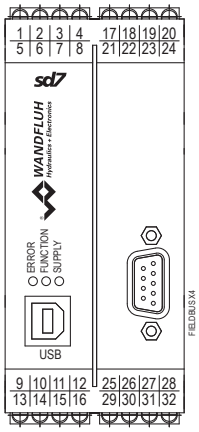

1 = Digital input 1
2 = Digital input 2
3 = Digital output 1
4 = Digital output 2
5 = Supply Analogue input +
6 = Supply voltage 0 VDC
7 = Stabilised output voltage
8 = Analog ground
9 = Analogue input 1 +
10 = Analogue input 1 -
11 = Analogue input 2 +
12 = Analogue input 2 -
13 = Output solenoid 2 +
14 = Output solenoid 2 -
15 = Output solenoid 1 +
16 = Output solenoid 1 -
17 = Digital input 3
18 = Digital input 4
19 = Digital input 5
20 = Digital input 6
21 = Digital input 7
22 = Digital input 8
23 = Digital output 3
24 = Digital output 4
25 = Analogue input 3 +
26 = Analogue input 3 -
27 = Analogue input 4 +
28 = Analogue input 4 -
29 = Digital ground
30 = Analogue ground
31 = Stabilised output voltage
32 = Analogue output

Configuration Analogue input

Type description	Analogue inputs			
	No. 1	No. 2	No. 3	No. 4
SD7362Dx**4**-BP	Voltage	Current	Voltage	Current
SD7362Dx**5**-BP	Voltage	Voltage	Voltage	Voltage
SD7362Dx**6**-BP	Current	Current	Current	Current
SD7362Dx**7**-BP	Voltage	Voltage	Current	Current
SD7362Dx**8**-BP	Current	Current	Voltage	Voltage

START-UP

Information regarding installation and commissioning are contained in the information leaflet supplied with the amplifier module and in the operating instructions.

Additional information can be found on our website:
www.wandfluh.com

Free-of-charge download:
:• «PASO-SD7» Parameterisation software
• Operating instructions (*.pdf)
• GSD-file «WAGOB8E.gsd»

ADDITIONAL INFORMATION

	Wandfluh documentation	
Wandfluh electronics general	register	1.13
Proportional directional valves	register	1.10
Proportional pressure valves	register	2.3
Proportional flow control valves	register	2.6

DESIGN

The amplifier module can be parameterised by means of the parameterisation software «PASO-SD7» through the USB-interface. In addition, the parameterisation software makes a data analysis possible. The software «PASO-SD7» is supported by Windows 2000 and Windows XP, Vista and Windows 7 with 32/64-Bit. The device control (enable, etc.) as well as the command value setting can be preset via the Profibus DP or locally via digital, resp. analogue inputs. Furthermore the parameterisation as well as an analysis/diagnostic are possible via the Profibus DP.

FUNCTION DESCRIPTION

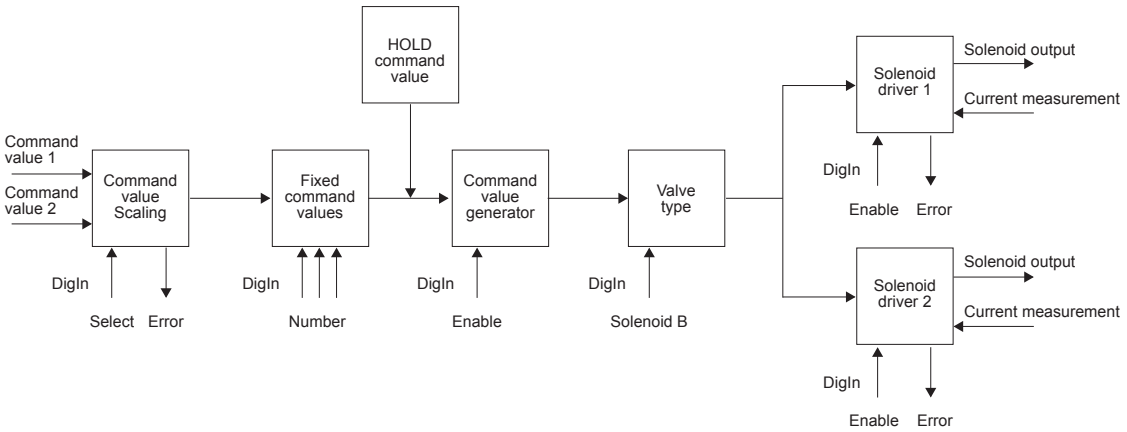

SD7 ENHANCED AMPLIFIER WITH PROFIBUS DP INTERFACE

Command value scaling

The command value can be applied via the Profibus DP or as a voltage, current, digital, frequency or PWM signal. For every command value, the input utilised can be selected. The scaling takes place via the parameters „Interface“ and „Reference“. Furthermore every command value can be monitored for a cable break (except for Profibus DP, voltage or digital signal). For every command value a dead band can also be set. Optionally one can operate with two command values. The characteristic of these command values can be adjusted.

Fixed command values

There are 7 fixed command values available, which can be selected via 3 digital inputs.

Command value generator

For each solenoid output two linear ramps for up and down are available which can be adjusted separately.

HOLD command value

If via Profibus DP the device is put into the “HOLD” condition, the respective command value is activated.

Valve type

Here the operating mode is set. In addition it can be selected whether proportional or switching solenoids are driven.

Mode of operation „Command value unipolar (1-Sol)“

Dependent on a unipolar command value signal (voltage, current, frequency or PWM), the solenoid is driven (e.g. 0….10V correspond to 0….100 % command value, 0....100 % command value correspond to Imin….Imax solenoid driver 1).

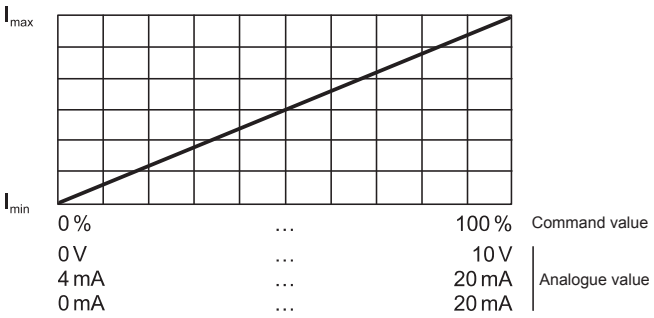

Mode of operation „Command value unipolar (2-Sol)“

Dependent on a unipolar command value signal (voltage, current, frequency or PWM), one of the two solenoids is driven, acc. to the signal level. The changeover threshold between the two solenoids as standard is in the middle of the values range of the command value signal. (e.g. 0….10V correspond to -100….+100 % command value, -100....0 % command value correspond to Imin….Imax solenoid driver 2, 0….+100 % command value correspond to Imin….Imax solenoid driver 1).

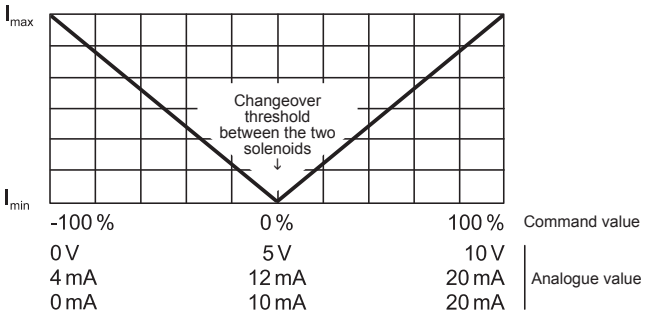

Mode of operation „Command value bipolar (2-Sol)“
Dependent on a bipolar command value signal (voltage), one of the two solenoids is driven, acc. to the signal level. The changeover threshold between the two solenoids as standard is at 0V (e.g. -10….+10V correspond to -100….+100 % command value, -100....0 % command value correspond to Imin….Imax solenoid driver 2, 0….+100 % command value correspond to Imin….Imax solenoid driver 1).

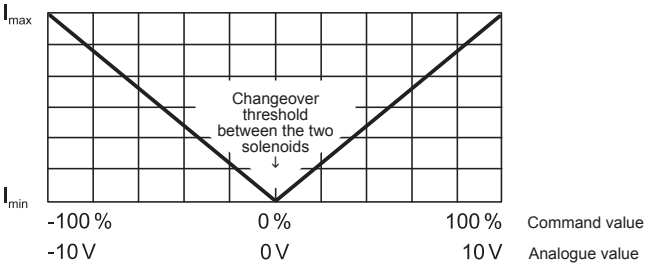

Mode of operation „Command value unipolar (2-Sol with DigIn)“
Dependent on a unipolar command value signal (voltage, current, frequency or PWM), the solenoid is driven by solenoid driver 1, when the selected digital input is „not activated“, resp. the solenoid by the solenoid driver 2, when the selected digital input is „activated“ (e.g. 0….10V correspond to 0….100 % command value, 0....100 % command value correspond to Imin….Imax solenoid driver 1 or 2).

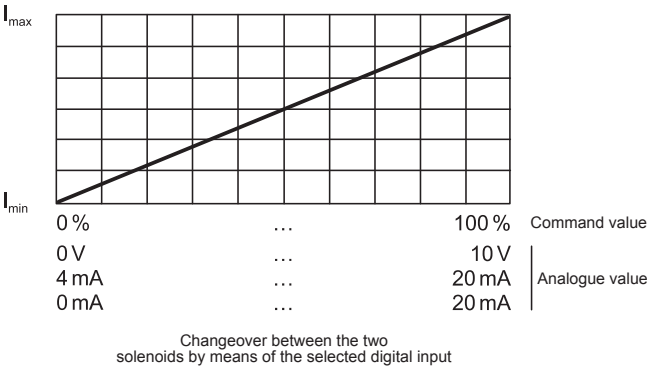

Signal recording
The SD7 amplifier module has a signal recording function, This, by means of PASO, enables the recording of various system signals, such as command value, solenoid currents, etc., which can be represented on a common time axis.

Solenoid driver
Two Pulse-Width-Modulated current outputs are available. To each output, a dither signal is superimposed, whereas dither frequency and dither level can be adjusted separately. For each output, the minimum (Imin) and maximum (Imax) current can be adjusted separately. The solenoid outputs can also be configurated as switching outputs. Therewith for each output a power reduction can be adjusted separately.

Optimisation of characteristic curve
A characteristic curve adjustable per solenoid „Command value input – solenoid current output“ enables an optimised (e.g., linearised) characteristic of the hydraulic system.

CONNECTION EXAMPLE

Mode of operation „command value unipolar (2-Sol)“ or „command value unipolar (2-Sol with DigIn)“

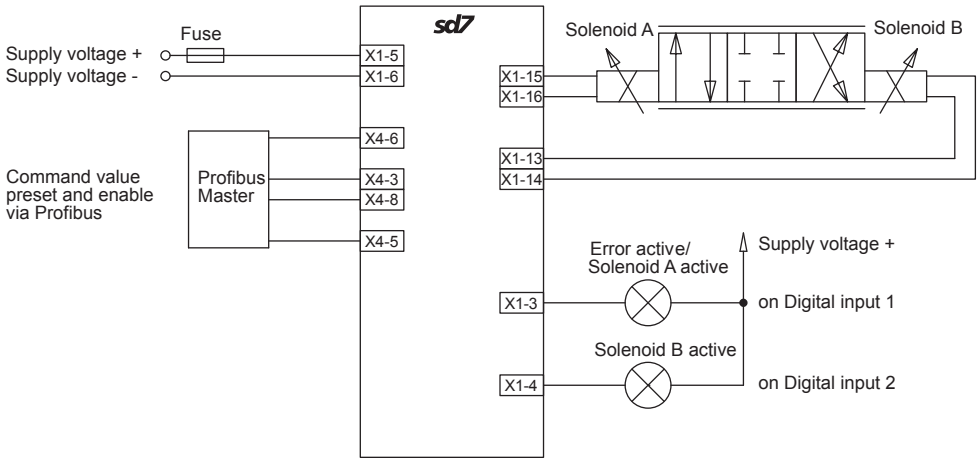

Mode of operation „command value unipolar (1-Sol)“

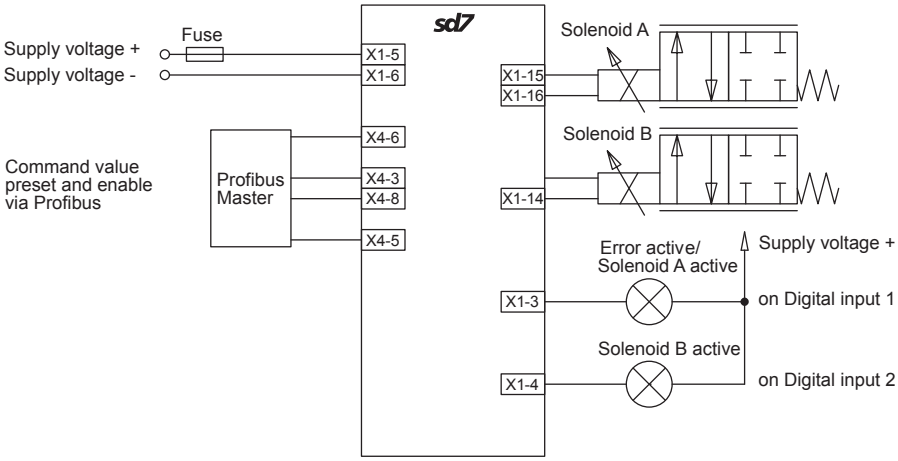

Enhanced amplifier with HART interface

ELECTRICAL SPECIFICATIONS

Protection class	IP 30 acc. to EN 60 529
Supply voltage	24 VDC or 12 VDC
Voltage range:	
• 24 VDC	21,0…30,0 VDC
• 12 VDC	10,5…15,0 VDC
Residual ripple	<10 %
Fuse	low
Current consumption:	
• Non-load current	approx. 40 mA
• Maximum current consumption	non-load current + 1,8 A per solenoid (with 24 VDC) non-load current + 2,3 A per solenoid (with 12 VDC)
Analogue inputs:	Selectable with software Input 1, 2 and 4: Diff. inputs not galvanically separated, for ground potential differences up to 1,5 V 4…+20 mA / 0…+20 mA 0…+10 V (1- or 2-solenoid version) -10…+10 V (only 2-solenoid version) Input 3: galvanically separated for HART Signal 4…+20 mA / 0…+20 mA
Resolution	10-Bit (Analogue inputs 1 and 2) 16-Bit (Analogue inputs 3 and 4)
Input resistance	Voltage input >18 kΩ Load for current input = 250 Ω
Analogue output	Current output 0…20 mA max. Voltage output 12 V
Stabilised output voltage	10 VDC (with 24 VDC) 8 VDC (with 12 VDC) max. load 30 mA
HART interface	via analogue input 3

Solenoid current:	
• Minimal current I_{min}	Adjustable 0…950 mA Factory setting 150 mA
• Maximal current I_{max}	Adjustable I_{min}…1,8 A (with 24 VDC) I_{min}…2,3 A (with 12 VDC) Factory setting 700 mA
• Accumulated current limitation	The accummulated current of the simultaneously powered solenoids depends on the ambient temperature. Further information can be found in the operating instructions..
Dither	Frequency adjustable 2…500 Hz Factory setting 100 Hz Level adjustable 0…400 mA Factory setting 100 mA
Temperature drift	<1 % at ΔT = 40 °C
Digital inputs	Switching threshold high 6…30 VDC Switching threshold low 0…1 VDC
Digital outputs	Low-Side-Switch: U_{max} = 40 VDC I_{max} = -700 mA
Ramps adjustable	Adjustable 0…500 s
Serial interface	USB (receptacle type B)
EMV	
• Immunity	EN 61 000-6-2
• Emission	EN 61 000-6-4

DIMENSIONS

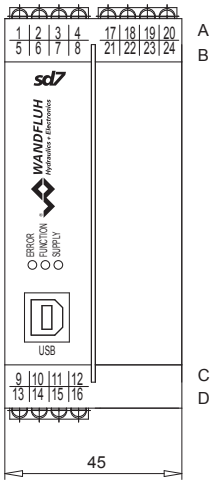

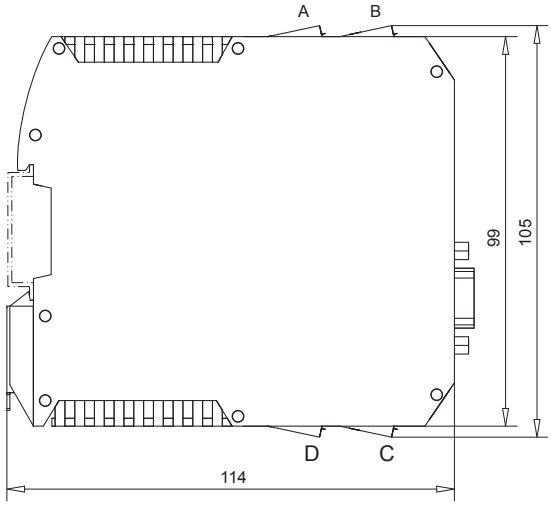

BLOCK DIAGRAM

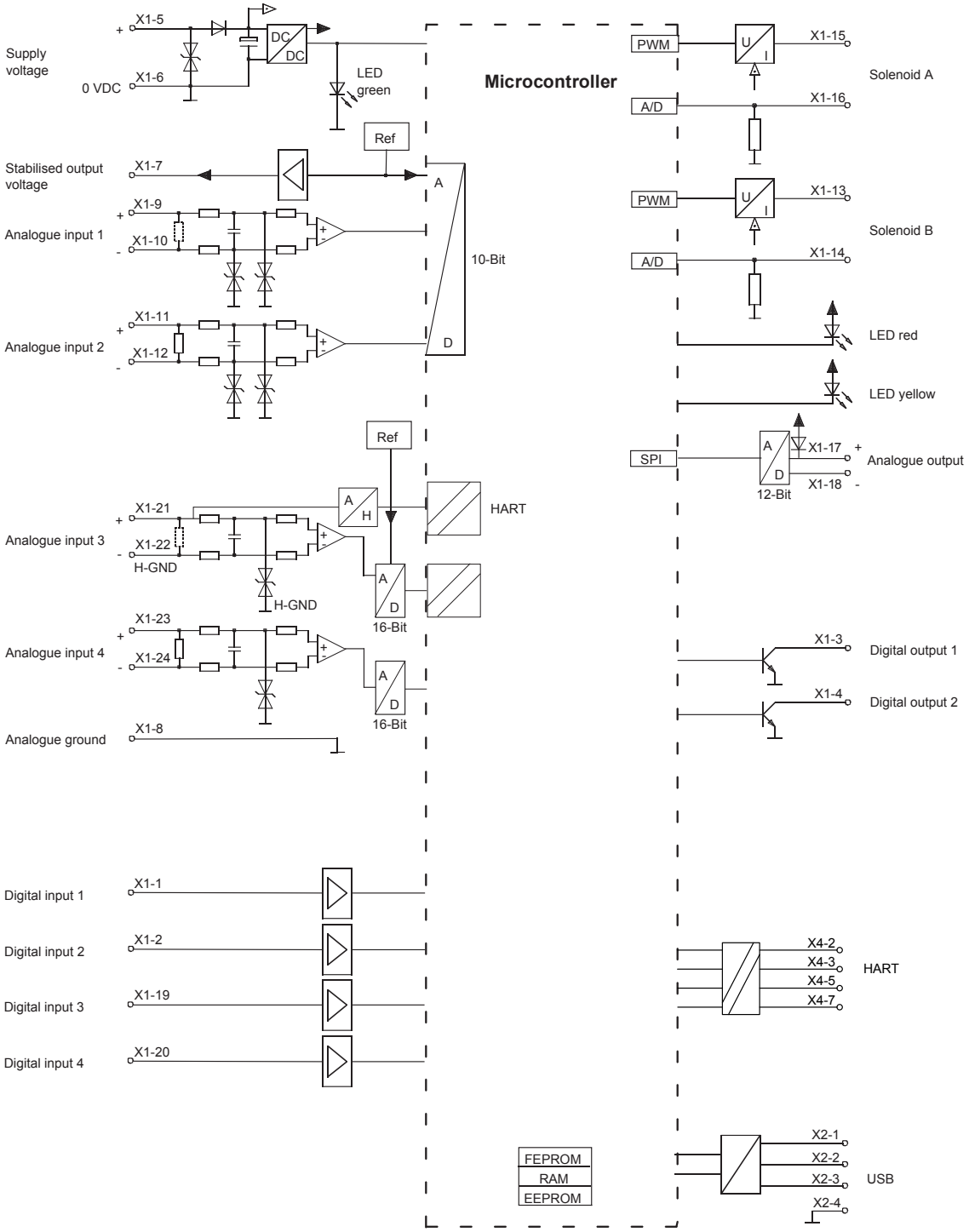

CONNECTOR WIRING DIAGRAM / PIN ASSIGNMENT

USB interface, USB Type B X2

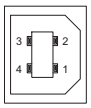

1 = VBUS
2 = D -
3 = D +
4 = GND

REMARK!
The parameterisation cable is not part of the scope of supply (commercially available USB-cable, plug type A to plug type B)

PIN Assignment X1

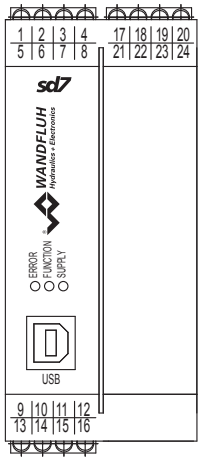

1 = Digital input 1
2 = Digital input 2
3 = Digital output 1
4 = Digital output 2
5 = Supply Analogue input +
6 = Supply voltage 0 VDC
7 = Stabilised output voltage
8 = Analogue ground
9 = Analogue input 1 +
10 = Analogue input 1 -
11 = Analogue input 2 +
12 = Analogue input 2 -
13 = Output solenoid B +
14 = Output solenoid B -
15 = Output solenoid A +
16 = Output solenoid A -
17 = Analogue output +
18 = Analogue output -
19 = Digital input 3
20 = Digital input 4
21 = Analogue input 3 + HART
22 = Analogue input 3 - HART
23 = Analogue input 4 +
24 = Analogue input 4 -

Configuration Analogue input

Type description	Analogue inputs			
	No. 1	No. 2	No. 3	No. 4
SD7362Dx**4**-BH	Voltage	Current	Current	Current
SD7362Dx**5**-BH	Voltage	Voltage	Current	Voltage
SD7362Dx**6**-BH	Current	Current	Current	Current
SD7362Dx**7**-BH	Voltage	Voltage	Current	Current
SD7362Dx**8**-BH	Current	Current	Current	Voltage

START-UP

Information regarding installation and commissioning are contained in the information leaflet supplied with the amplifier module and in the operating instructions.

Additional information can be found on our website:
www.wandfluh.com

Free-of-charge download:
• «PASO-SD7» Parametriersoftware
• Operating instructions (*.pdf)
• EDD-file «WAGSD7.ddl»

ADDITIONAL INFORMATION

	Wandfluh documentation	
Wandfluh electronics general	register	1.13
Proportional directional valves	register	1.10
Proportional pressure valves	register	2.3
Proportional flow control valves	register	2.6

DESIGN

The amplifier module can be parameterised by means of the parameterisation software «PASO-SD7» through the USB-interface. In addition, the parameterisation software makes a data analysis possible. The software «PASO-SD7» is supported by Windows 2000 and Windows XP, Vista and Windows 7 with 32/64-Bit. The device control (enable, etc.) as well as the command value setting can be preset via HART or locally via digital, resp. analogue inputs. Furthermore the parameterisation as well as an analysis/diagnostic are possible via HART.

FUNCTION DESCRIPTION

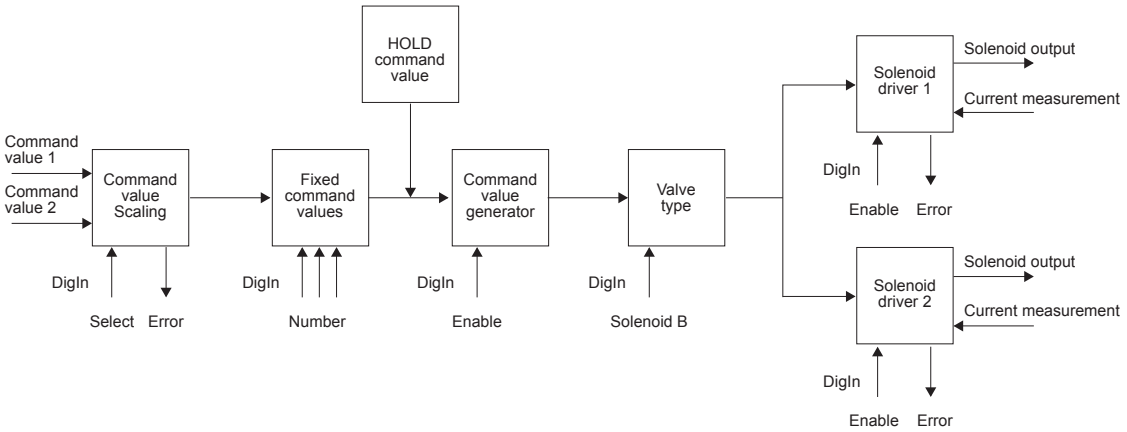

SD7 ENHANCED AMPLIFIER WITH HART INTERFACE

Command value scaling
The command value can be applied via HART or as a voltage, current or digital signal. For every command value, the input utilised can be selected. The scaling takes place via the parameters „Interface“ and „Reference“. Furthermore every command value can be monitored for a cable break (except for HART, voltage or digital signal). For every command value a dead band can also be set. Optionally one can operate with two command values. The characteristic of these command values can be adjusted.

Fixed command values
There are 7 fixed command values available, which can be selected via 3 digital inputs.

Command value generator
For each solenoid output two linear ramps for up and down are available which can be adjusted separately.

HOLD command value
If via CANopen/J1939 the device is put into the “HOLD” condition, the respective command value is activated.

Valve type
Here the operating mode is set. In addition it can be selected whether proportional or switching solenoids are driven.

Mode of operation „Command value unipolar (1-Sol)“
Dependent on a unipolar command value signal (voltage, current, frequency or PWM), the solenoid is driven (e.g. 0….10V correspond to 0….100 % command value, 0....100 % command value correspond to Imin….Imax solenoid driver 1).

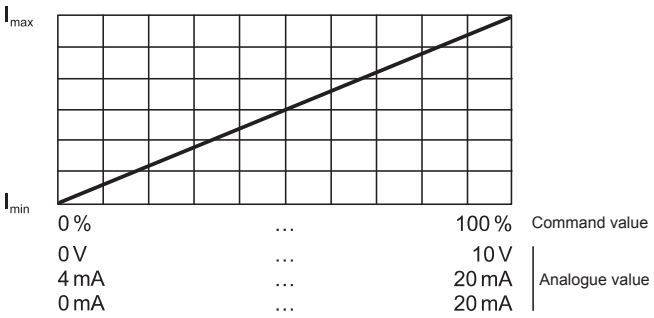

Mode of operation „Command value unipolar (2-Sol)“
Dependent on a unipolar command value signal (voltage, current), one of the two solenoids is driven, acc. to the signal level. The changeover threshold between the two solenoids as standard is in the middle of the values range of the command value signal. (e.g. 0….10V correspond to -100….+100 % command value, -100....0 % command value correspond to Imin….Imax solenoid driver 2, 0….+100 % command value correspond to Imin….Imax solenoid driver 1).

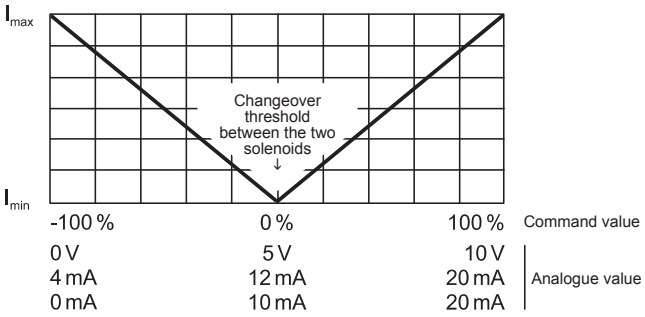

Mode of operation „Command value bipolar (2-Sol)“
Dependent on a bipolar command value signal (voltage), one of the two solenoids is driven, acc. to the signal level. The changeover threshold between the two solenoids as standard is at 0V (e.g. -10….+10V correspond to -100….+100 % command value, -100....0 % command value correspond to Imin….Imax solenoid driver 2, 0….+100 % command value correspond to Imin….Imax solenoid driver 1).

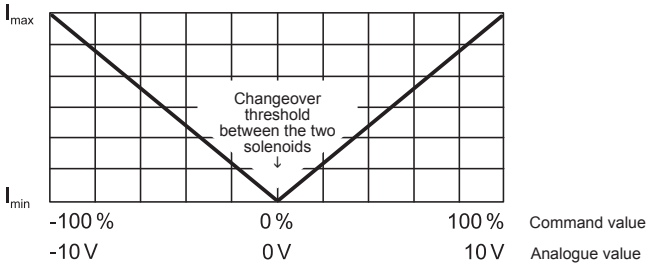

Mode of operation „Command value unipolar (2-Sol with DigIn)“
Dependent on a unipolar command value signal (voltage, current), the solenoid is driven by solenoid driver 1, when the selected digital input is „not activated“, resp. the solenoid by the solenoid driver 2, when the selected digital input is „activated“ (e.g. 0….10V correspond to 0….100 % command value, 0....100 % command value correspond to Imin….Imax solenoid driver 1 or 2).

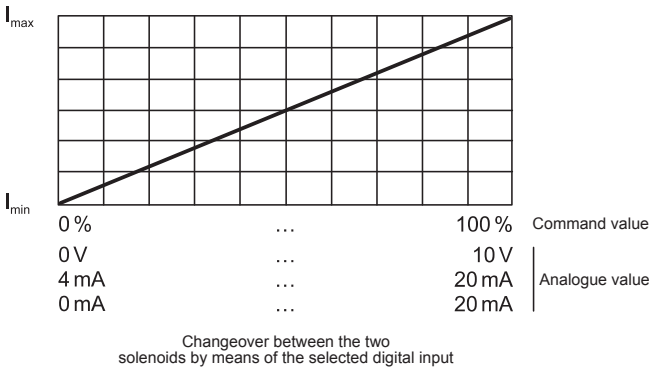

Signal recording
The SD7 amplifier module has a signal recording function, This, by means of PASO, enables the recording of various system signals, such as command value, solenoid currents, etc., which can be represented on a common time axis.

Solenoid driver
Two Pulse-Width-Modulated current outputs are available. To each output, a dither signal is superimposed, whereas dither frequency and dither level can be adjusted separately. For each output, the minimum (Imin) and maximum (Imax) current can be adjusted separately. The solenoid outputs can also be configurated as switching outputs. Therewith for each output a power reduction can be adjusted separately.

Optimisation of characteristic curve
A characteristic curve adjustable per solenoid „Command value input – solenoid current output“ enables an optimised (e.g., linearised) characteristic of the hydraulic system.

CONNECTION EXAMPLE

Mode of operation „command value unipolar (2-Sol)“ or „command value unipolar (2-Sol with DigIn)“

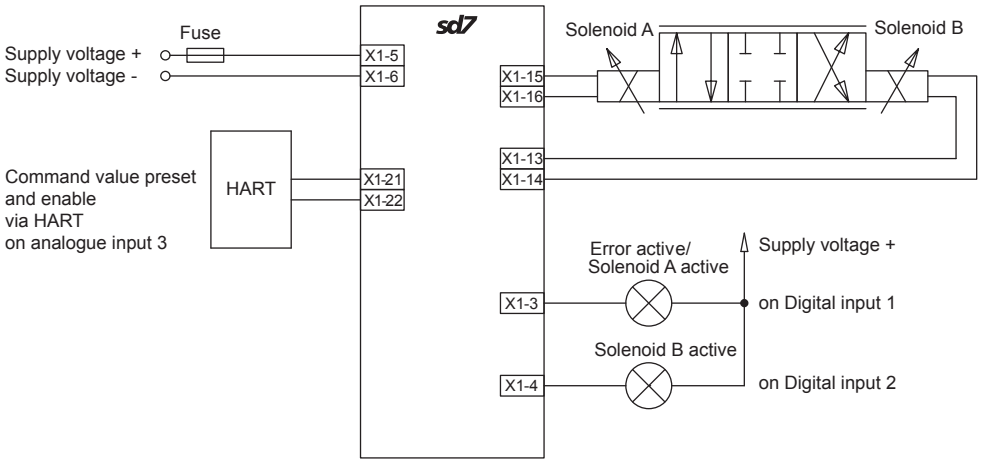

Mode of operation „command value unipolar (1-Sol)“